RULES FOR COMPETITION

Effective from 1st April 2006

UK Athletics
Athletics House
Central Boulevard
Blythe Valley Park
Solihull B90 8AJ

Tel: 0870 998 6800 Fax: 0870 998 6752
W: www.ukathletics.net E: information@ukathletics.org.uk

©UK Athletics Ltd ISBN 0-9547401-1-4

Typeset by Polestar Applied Solutions Ltd., Milton Keynes
Printed and bound by Polestar Wheatons Ltd., Exeter

OFFICERS OF UKA GROUPS

OFFICIALS GROUP

Coordinator: A. J. CLATWORTHY, 26 Columba Drive, Leighton Buzzard, Beds. LU7 3YN Tel/Fax: 01525 371186

RULES AND RECORDS GROUP

Chairman: J. W. McINNES, 20 Larchfield, Colquhoun Street, Helensburgh. G84 9JG Tel/Fax: 01436 674233

Hon. Secretary: D. R. LITTLEWOOD, 26 Newborough Green, New Malden, Surrey. KT3 5HS. Tel: 020 8949 1506; Fax: 020 8942 0943

NATIONAL/TERRITORIAL ASSOCIATIONS

ENGLAND

ATHLETICS ENGLAND

To be confirmed

MIDLAND COUNTIES ATHLETIC ASSOCIATION

Office: Edgbaston House, 3 Duchess Place, Hagley Road, Birmingham. B16 8NM Tel: 0121 456 1896 www.midlandathletics.org.uk

Officials' Secretary: Mrs. M. BULLEN, 56 Kittoe Road, Sutton Coldfield, West Midlands. B74 4SA. Tel: 0121 308 2257

NORTH OF ENGLAND ATHLETIC ASSOCIATION

Office: 7 Wellington Road East, Dewsbury, West Yorkshire. WF13 1HF Tel: 0870 991 4545; Fax: 0870 991 4546. www.noeaa-athletics.org.uk

Officials' Secretary: R. BROWN, 107 Tedder Road, Acomb, York. YO24 3JE Tel: 01904 792646

SOUTH OF ENGLAND ATHLETIC ASSOCIATION

Marathon House, 115 Southwark Street, London. SE1 0JF Tel: 020 7021 0988; Fax: 020 7620 0012. www.seaa.org.uk

Officials' Secretary: J. NEALE, 29 Preston Parade, Seasalter, Whitstable. Kent. CT5 4ADTel/Fax: 01227 276558

NORTHERN IRELAND

NORTHERN IRELAND AMATEUR ATHLETIC FEDERATION
Office: Athletics House, Old Coach Road, Belfast. BT9 5PR Tel: 028 9060 2707; Fax: 028 9030 9939 www.niathletics.org
Officials' Secretary: Mrs. P. BROWN, 29 Cogry Road, Ballyclare, Co. Antrim. BT39 9JG Tel: 028 9335 2129

SCOTLAND

SCOTTISH ATHLETICS LTD.
Office: 9a South Gyle Crescent, Edinburgh. EH12 9RB Tel: 0131 539 7320. www.scottishathletics.org.uk
Officials' Secretary: V. HOCKLEY, 41 Murieston Park, Murieston South, Livingston. West Lothian. EH54 9DU. Tel: 01506 440097

WALES

ATHLETIC ASSOCIATION OF WALES
Office: The Manor, Coldra Woods, Newport. NP10 1WA Tel: 01633 416633 www.welshathletics.org
Officials' Secretary: D. CROWDER, 15 Bredenbury Gardens, Nottage, Porthcawl. CF36 3NY. Tel: 01656 786700

UK ATHLETICS POLICY AND SUPPORT TEAMS (PST)

ENDURANCEHead of PST: To be confirmed. Appointment pending.

TRACK AND FIELD
Head of PST: R. SIMONS, Tower Lodge, Church Lane, Ashbury, Oxon. SN6 8LZ Tel: 01793 710801. e-mail: roger-maggie@asham.fsnet.co.uk

INDEX TO RULES

A detailed index to Rules 1-159 will be found after the appendices

Rule 1	Eligibility to Compete
Rule 2	Clubs
Rule 3	Club Membership
Rule 4	Competition Conditions
Rule 5	First Claim Status
Rule 6	Eligibility Committee and Exemption Applications
Rule 7	Age Groups
Rule 8	Team Events
Rule 9	County Qualification (England and Wales)
Rule 10	Territorial and District Championship Qualifications
Rule 11	Athletes' Representatives
Rule 12	Permission to Promote
Rule 13	Notification of Events to be Broadcast
Rule 14	Entries
Rule 15	Programme and Published Matter
Rule 16	Advertising and Sponsorship
Rule 17	Clothing
Rule 18	Number Cards
Rule 19	Betting
Rule 20	Challenge Cups
Rule 21	Assistance
Rule 22	Misconduct
Rule 23	Protests and Appeals
Rule 24	Doping

TRACK AND FIELD RULES

General Competition Rules

Rule 100	Team Events
Rule 101	Registration of Track and Field Leagues
Rule 102	Footwear
Rule 103	Numbers
Rule 104	Dressing Accommodation
Rule 105	Assistance
Rule 106	Protests
Rule 107	Competitions confined to particular Age Groups

Track Events

Rule 108	Track Measurements
Rule 109	Stations
Rule 110	Starting Blocks
Rule 111	The Start

Rule 112 The Race
Rule 113 The Finish
Rule 114 Ties
Rule 115 Qualification from Preliminary Heats
Rule 116 Hurdle Races
Rule 117 Steeplechase Races
Rule 118 Relay Races
Rule 119 Timing and Photo-Finish

Field Events
Rule 120 General Conditions

Vertical Jumps
Rule 121 General Conditions
Rule 122 High Jump
Rule 123 High Jump Specifications
Rule 124 Pole Vault
Rule 125 Pole Vault Specifications

Horizontal Jumps
Rule 126 General Conditions
Rule 127 General Specifications
Rule 128 Long Jump
Rule 129 Triple Jump

Throwing Events
Rule 130 General Conditions
Rule 131 Putting the Shot
Rule 132 Putting the Shot Specifications
Rule 133 Throwing the Hammer
Rule 134 Throwing the Hammer Specifications
Rule 135 Throwing the Discus
Rule 136 Throwing the Discus Specifications
Rule 137 Cages for Hammer and Discus
Rule 138 Throwing the Javelin
Rule 139 Throwing the Javelin Specifications
Rule 140 Combined Events
Rule 141 Records

DISABILITY ATHLETICS RULES (TRACK AND FIELD)
General Rules
Rule D16 Advertising and Sponsorship
Rule D17 Clothing
Rule D24 Doping

Track and Field
Rule D103 Numbers
Rule D105 Assistance

Rule D108 Wheelchair Specifications

Track Events
Rule D109 Stations
Rule D111 The Start
Rule D112 The Race
Rule D113 The Finish
Rule D115 Qualification from Preliminary Heats
Rule D118 Relay Races
Rule D119 Timing and Photo-Finish

Field Events
Rule D120 General Conditions

Vertical Jumps
Rule D121 General Conditions
Rule D122 High Jump

Horizontal Jumps
Rule D126 General Conditions
Rule D127 General Specifications

Throwing Events
Rule D130 General Conditions
Rule D131 Putting the Shot
Rule D132 Putting the Shot Specifications
Rule D135 Throwing the Discus
Rule D139 Throwing the Javelin
Rule D140 Combined Events
Rule D141 Records

ULTRA-DISTANCE TRACK EVENT RULES
Rule 151–153 General Rules
Rule 154 Timekeeping
Rule 155 Lap Times
Rule 156 Fixed Time Races
Rule 157 Multi-day Races
Rule 158 General Conditions
Rule 159 Records/Best Performances

ROAD RUNNING RULES
Rule 201 General

Rules for Promoters
Rule 202 General
Rule 203 Race Classification
Rule 204 Race Permits

Rule 205 The Course
Rule 206 Refreshments
Rule 207 Age Limits in Races
Rule 208 Entries
Rule 209 Race Numbers
Rule 210 Prizes

Rules for Runners
Rule 211 General
Rule 212 Clothing
Rule 213 Transponder Timing
Rule 214 Assistance
Rule 215 The Course
Rule 216 Entries
Rule 217 Advertising
Rule 218 Objections and Appeals
Rule 219 Spare
Rule 220 Spare

Team Races
Rule 221 Eligibility for Club Teams
Rule 222 Clothing
Rule 223 Entries
Rule 224 Team Declarations
Rule 225 Results

Road Relays
Rule 226 Entries
Rule 227 Race Numbers
Rule 228 Team Declarations
Rule 229 Runners

DISABILITY ATHLETICS (ROAD RACES)
Rule D206 Refreshments
Rule D211 Rules for Runners - General
Rule D214 Assistance

RACE WALKING RULES
Rule 300 General
Rule 301 Definition of Race Walking
Rule 302 Permission to Promote
Rule 303 Appointment of Judges
Rule 304 System of Judging
Rule 305 Clothing when Walking

Rule 306 Disqualification
Rule 307 Age Groups
Rule 308 Maximum Distances
Rule 309 Safety
Rule 310 Mixed Competition

FELL AND HILL RUNNING RULES
Rule 400 Definition of Terms
Rule 401 General
Rule 402 Veterans
Rule 403 Registration of Events
Rule 404 Advertising and Printed Matter
Rule 405 Safety Requirements
Rule 406 Entries
Rule 407 Additional Rules
Rule 408 Retirement from a Race
Rule 409 Team Events
Rule 410 Age Limits
Rule 411 Disciplinary Procedures
Rule 412 British Championship Ranking List

CROSS COUNTRY RULES
Rule 500 General
Rule 501 Clubs
Rule 502 Spare
Rule 503 Open Events
Rule 504 Entries
Rule 505 Infringements
Rule 506 The Start
Rule 507 Age Groups
Rule 508 Maximum Distances
Rule 509 Team Scoring
Rule 510 Mixed Competition
Rule 511 Relay Competitions
Rule 512 Team Races
Rule 513 Registration of Cross Country Leagues
Rule 514 Transponder Timing

TRAIL RUNNING COMPETITION RULES
Rule 601 General
Rule 602 Definition of Terms
Rule 603 Spare
Rule 604 Course Design
Rule 605 Race Permits
Rule 606 Advertising
Rule 607 Responsibilities of Organisers
Rule 608 Preparation of Course

Rule 609 Information for Competitors
Rule 610 Age Limits
Rule 611 Additional Information
Rule 612 Spare
Rule 613 Responsibilities of Competitors
Rule 614 Handlers and Supporters
Rule 615 Late Entries
Rule 616 Trophies and Prizes

APPENDICES
Appendix A Indoor Competitions — Code of Practice
Appendix B Timekeepers — Code of Practice
Appendix C Electronic Distance Measurement — Code of Practice
Appendix D Duties of Track and Field Officials
Appendix E Testing and Grading of Track and Field Technical Officials
Appendix F Road Walking Rules for Championships
Appendix G Rules for Scottish Heavy Events
Appendix H Disability Athletics — Classification Identification System

In This Edition

| | Straight lines on either side of a Rule indicate an important change of wording as compared with the previous edition

and

Zigzag lines either side of a Rule indicate an important deletion

UK ATHLETICS
RULES FOR COMPETITION

NOTES

Attention is drawn to the fact that in the Rules the words 'must', 'shall' and 'should' are frequently used. The variation in phrase is intentional. When the word 'must' or 'shall' is used the Rule is compulsory. Where 'should' is employed, while UK Athletics hopes that the Rule will be complied with, strict compliance is not essential. The Rules for Competition cover indoor as well as outdoor competition. The attention of Promoters and Officials is drawn to Appendix A which sets out the principal requirements and modifications for indoor competitions.

The following terms used throughout the Rules have the following meanings:

Terms	*Definitions*
UK Athletics (UKA)	The Member Federation of the IAAF responsible for athletics in the United Kingdom of Great Britain and Northern Ireland
National Association	A.A. of Wales, England Athletics, Northern Ireland A.A.F. Scottish Athletics Ltd.
Territorial Association	Midland C.A.A., North of England A.A., South of England A.A., and such other Associations as may be formed by UK Athletics from time to time
District	A Scottish District, a District of the North of England A.A., or similar geographical sub-division of a 'Territory' having a separate Committee for administrative purposes
Club	Affiliated Club, University, College, School, Services Unit, or Pre-Service Unit
PST	Policy and Support Team for a given area of activity of UK Athletics

The Executive Board of UK Athletics is responsible for the interpretation of UKA Rules.

NB: At the time of going to press the final decisions in England about the management of Eligibility, Athlete and Club Registration and matters relating to Technical Officials have not been taken. Enquiries as to the appropriate Association to approach in connection with the above should be directed, in the first instance, to UKA. In the case of matters relating to eligibility, registration and officials within Northern Ireland, Scotland and Wales these remain within the jurisdiction of the appropriate National Association.

RULE 1 ELIGIBILITY TO COMPETE

All competitions under the Rules of UK Athletics (UKA) are confined to amateurs under the following definitions (hereinafter termed amateurs under UKA Rules):

(1) **Definition of Amateur**
An amateur is a person who is eligible to compete under the Rules of UKA.

(2) **Restriction of Competition to Amateurs**
Competition under UKA Rules is restricted to amateur athletes who are under the jurisdiction of a Member of the International Association of Athletics Federations (IAAF) and who are eligible under the rules laid down by UK Athletics.

(3) **Ineligibility to Compete**
The following are ineligible to take part in competition under UKA Rules:

Any persons who:

(a) have taken part in any competition in which any of the competitors in any of the events were to their knowledge ineligible to compete under UKA Rules.

NOTE: This does not apply to any athletics meeting which is solely restricted to the Masters age group.

(b) are ineligible to compete in competitions under the jurisdiction of any national governing body of amateur athletics affiliated to the IAAF.
(c) take part in any athletics meeting, other than a Hill or Fell race, which is not sanctioned by UKA or other appropiate Association.
(d) take part in any competition outside the United Kingdom of Great Britain and Northern Ireland which is not sanctioned, recognised or certified by the Member Association of the IAAF.
(e) have competed, or are competing in any sport for pecuniary reward, other than as permitted by IAAF Rules which have been accepted by UK Athletics.
(f) are suspended or banned for a doping offence by UK Athletics, or by the Governing Body of any other sport.
(g) ask for, or receive, directly or indirectly, any monetary consideration, reward or employment for becoming or continuing as a member of a Club or any other athletic organisation.
(h) use the services of an Athletes' Representative other than one approved under Rule 11.
(i) have been suspended or banned for being in breach of Rules 16 or 17 (Advertising and Sponsorship or Clothing).
(j) have been declared ineligible to compete by the IAAF.

(k) have committed any acts or made any statements either verbally or in writing, or have been responsible for any breaches of the Rules, or other conduct which, in the opinion of a Territorial or National Association is considered to be insulting, improper or likely to bring the sport and/or UK Athletics into disrepute.

(4) Unless the period of ineligibility is stated in the relevant Rule or Regulation of the IAAF or UK Athletics, those ineligible under this Rule shall be deemed ineligible for a period set down in guidelines produced by the Executive Board of UK Athletics, or, in the absence of such guidelines, for such period as the Executive Board of UK Athletics (for doping matters) or the Territorial or National Association (for all non-doping matters) shall decide.

(5) If athletes compete whilst suspended or ineligible, the period of this ineligibility shall be deemed to recommence from the time they last competed as though no part of a period of suspension or ineligibility had been served.

RULE 2 CLUBS

(1) A Club is a bona fide Club or Society of amateur athletes affiliated to UKA in accordance with its Articles of Association and Rule Book. Each Club must also be affiliated to the Territorial or National Association in whose geographical area of responsibility the Club's headquarters are located. No Club may form a branch.

(2) An affiliated Club must supply to the Association to which it is affiliated, and to the UKA itself, such information as that body requires.

(3) A Club must be properly constituted with a constitution which provides, inter alia, for its democratic management by means of a managing committee and the holding of an annual general meeting of all its members.

(4) Athletics is organised within the following disciplines:-
(a) Track and Field
(b) Race Walking
(c) Road Running
(d) Cross Country including Trail Running
(e) Fell and Hill Running
(f) Trail Running

Clubs are deemed to cater for those disciplines for which they have declared to the appropriate Association the intention to compete in team competitions in that particular activity. Members of a Club may only compete in Championships or other Open Team competitions if their Club is specifically affiliated for that discipline.

RULE 3 CLUB MEMBERSHIP

(1) First Claim Club. The first Club joined by athletes will be known as their First Claim Club and will remain so until they give notice that they wish to terminate their membership of that Club. Such termination will only be effective once all outstanding dues to the Club have been paid. An athlete who is a member of a First Claim Club is defined hereafter as a **First Claim member**. If athletes wish to commence a new First Claim Club membership then they must comply with the requirements set out in Rules 5 & 6 below.
Once athletes have represented a Club in First Claim Open Team Competiton they are ineligible to compete for another Club in Open Team Competition until the transfer process to that Club has been completed in accordance with these Rules (i.e. after six months or a period of partial or total exemption under those Rules)

(2) **Second Claim Club.** Notwithstanding athletes having a First Claim Club as defined in (1) above they are permitted to become a member of a Second Claim Club. Whilst this may be for social, coaching or other reasons that athlete may compete for that Club in competitions which specifically state in rules that its competition is open to **Second Claim members**. Such an athlete is hereafter defined as a Second Claim member.

(3) **Higher Competition Club.** Track and Field athletes may apply for registration with the appropriate Association to compete for a 'Higher Competition Club' in **Senior Track and Field league competitions only**. A successful application will require the payment of a fee of £10 and the approval and endorsement of the application by the appropriate Association.
All applications must be received by the appropriate Association by 1st March of the competition year and will be effective for that calendar year only. Such application will only be accepted from athletes who, at the time of registration, are eligible to compete for their First Claim Club in Open Team Competition. (See Rule 4.3) The registration will take effect from 1st April of the year in question. The registration must be renewed with the same or another Club for each and every year that the athlete wishes to benefit from such higher level competition.

Three tiers of league competitions are recognised:-
(a) British (British Athletics League, UK Womens' League)
(b) National and Territorial (Northern Irish, Scottish, Welsh, Midland, Northern and Southern Leagues)
(c) Lower Regional and District Leagues.
Athletes may only join the 'Higher Competition Club' if their own First Claim Club does not, in that season, compete in that league. Athletes may, at their discretion, decide whether to compete for their Higher Competition Club or their First Claim club on any one day, but not for both. Athletes competing for their Higher Competition Club are hereafter defined as **Higher Competition Club members**.

Note: Rule 6 is not applicable to this category of member.

(4) **Open Team Competition.** Only First Claim members of a Club may represent that Club in Open Team Competition, as defined in Rule 4.3 below, unless the organisers have stipulated that such competition is open to either Second Claim members or Higher Competition Club members as defined in 3.2 and 3.3 above. (This option does not apply to Road Running and Rule 203.4 applies)

(5) Membership of a Club, whether under 3.1, 3.2 or 3.3 above, commences on the actual date of election by the Committee of that Club at a properly convened meeting. To be valid the application for membership must be made on a form approved by UKA and accompanied by the appropriate subscription.

(6) An athlete who is not a member of an affiliated Club or Association shall be regarded as 'unattached'. After one year of competition an athlete taking part in any event within disciplines listed in Rule 2.4 (a), (b), (d), (e) or (f) must be a member of a Club or Association affiliated directly or indirectly to UKA.

(7) A notice of resignation from a Club must be made in writing by the athlete or by a parent / guardian of the athlete concerned and shall be considered by the Club Committee within one calendar month of receipt. Membership shall be deemed to have ceased on the actual date of posting of the notice of resignation, unless the athlete be financially indebted to the Club, In this case the acceptance of the resignation shall be withheld until the indebtedness has been met. Where such indebtedness relates to unpaid subscriptions then the Club must have previously given notice of such a debt prior to the date of receipt of the resignation. In other cases of indebtedness the Club must inform the athlete in writing of the specific details of the debt within two weeks of the review of the resignation by the Club Committee. In the case of indebtedness the date of resignation shall be the date on which the debt is fully discharged. Members wishing to join another Club following resignation must comply with the conditions within Rule 5.7 below.

(8) After 28 days from ceasing to be a member of a Club or Association athletes shall not be eligible to compete in Open Competition until they have again become members of an affiliated Club or Association.

(9) Athletes may submit to the appropriate Eligibility Committee that their membership of a Club shall be deemed to have ceased as from two years since the payment of the appropriate annual subscription of that Club, provided they have not represented the Club in any Open Team Competition during that period of two years.

(10) In the case of a Club amalgamated with, or absorbed by, another Club, membership shall be regarded as continuous. If, however, members on receiving notice of the amalgamation or absorption of the Club, shall within

28 days notify in writing the Secretary of the Club, or other persons issuing such notice that they do not intend to continue in membership, such membership shall be regarded as having ceased on the date of amalgamation or absorption. The postion of the athlete in regard to Open Team Competition shall be the same as if the original Club had been disbanded.

(11) Athletes whose former Club has been officially disbanded may seek approval from the appropriate Association's Eligibility Committee to represent another Club in Open Team Competition forthwith.

(12)

(i) The Management Committee of an affiliated Club shall have the power to expel any member whose membership subscription is twelve months in arrears, provided that a month's notice in writing shall have been sent to the member's last known address giving information of the proposed action of the Committee.

(ii) The name and address of any person so expelled from a Club shall be sent to the Honorary Secretary of the appropriate Association who shall enter the name in a book to be called 'The Suspension Book' kept for that purpose. Every person whose name has been entered in the Suspension Book shall be suspended from competing at any meeting or event held under UKA Rules until the liability causing the expulsion, which shall not exceed one year's membership subscription, shall have been discharged.

(iii) A Club Secretary sending a name for inclusion in the Suspension Book must send the Post Office Proof of Posting of the letter sent to the Club member concerned, or the name will not be entered.

(13) Disputes between athletes and their Clubs may be referred to the appropriate Association Eligibility Committee for arbitration under its appeal procedure.

(14) Where the conduct of a Club member is deemed by UK Athletics to be sufficiently serious it may demand that the affiliated Club concerned expel that person from membership either in perpituity or for such a period of time as UK Athletics shall decide. This process shall only be adopted when the person concerned has not exercised any right of appeal, has exhausted any appeal procedure as laid down within the relevant Rules or procedures of UK Athletics or of the IAAF, or has waived that right, or where he or she has been found guilty of a serious criminal act. An affiliated Club which refuses to sanction the exclusion of such a person in turn renders itself liable to expulsion from membership of UK Athletics, as does any other affiliated Club which allows the person concerned to become a member or to become associated with any of the Club's activities.

(15) **Composite Teams.** UK Athletics, in liaison with meeting organisers, may approve an amalgamation of multiple Clubs which combine together to compete as a 'Composite Team'. Requests for approval of the establishment

of a Composite Team must be received by UK Athletics no later than 30th September of the preceding year.
NOTE: Such an amalgamation of teams for competition purposes specifically does not require the Constitution of the Clubs concerned to be amalgamated.

RULE 4 COMPETITION CONDITIONS

(1) For the purpose of determining place of birth for a competition qualification this may be either at the location of actual birth, or at the domicile of the mother at the time of birth, if different. In the event that the different locations are in different Counties or Districts then the athletes may make an irrevocable selection for which County or District they wish to be eligible. Once an athlete has made a decision as to their County or District of birth this may not be changed.

(2) **Individual Open Competition**
An Open Competition is one, which is open to all eligible athletes, including one restricted to a particular County, District or Territory and/or age group.

(3) **Open Team Competition**
Open Team Competitions, Relay Races and Team Races are competitions open to all eligible affiliated Clubs, including all Clubs in a particular County, District or Territory and/or age group. The organisers of such competitions or races may make such qualifying conditions as they think fit, including the right to stipulate that they shall be for First claim and Higher Competition Club members only, but not at the exclusion of either, in Senior Track and Field League Competition.

Notwithstanding the above, Senior Track and Field League Organisation rules may limit the number of Higher Competition athletes allowed to compete per Club in any one fixture. This number must be at least two per Club. The rules of specific Leagues may permit a larger number to compete. Higher Competition Club members competing under these Rules shall not have their points disallowed from their Club's score because of their status as Higher Competition Club members.

There is no restriction to the total number of Higher Competition members that a Club may have registered at any one time.

(4) **Jurisdiction**
Every promoter of an athletics meeting or competition under UKA Rules, and every person tendering an entry for such meeting or competitions shall be considered to have submitted to the jurisdiction of UKA on all questions which may arise concerning the application, construction, meaning or effect of the Rules of UKA.

(5) **Competitions involving Foreign Clubs and Foreign Athletes**

(a) No Club or member of a Club under the jurisdiction of UKA may compete outside the United Kingdom of Great Britain and Northern Ireland, and no foreign Club or a member of a foreign Club may compete or be invited to compete within the United Kingdom without the permission of UKA.

(b) Any application to compete outside the United Kingdom or for permission to invite any foreign Club or member of a foreign Club to compete within the United Kingdom must be made to UKA.

(c) Athletes desiring to compete outside the United Kingdom and any foreign athletes desiring to compete within the United Kingdom must present to the body promoting the meeting at which they desire to compete, a letter signed by the proper official of their Governing Body stating that they satisfy the definition of an athlete eligible under IAAF Rule 51,and are permitted to compete.

(d) No Club or member of a Club desiring to compete outside the United Kingdom is allowed either directly or indirectly to demand or receive from the organisers or the meeting payment of any sum towards the expense incurred except by special permission of UKA and then only in accordance with the regulations of the IAAF.

(e) No British athlete resident in the United Kingdom may compete under UKA Rules as a member of a foreign Club.

(f) No one shall be allowed to compete in any competitions under UKA Rules while disqualified or suspended from competing by, or under any Rule of UKA or by any National Governing Body of Athletics affiliated to the IAAF.

RULE 5 FIRST CLAIM STATUS

(1) Where athletes are at school, that school shall always have first claim on their services irrespective of any other claim on them.

(2) Under 13 and Under 15 athletes are permitted to change Club once only whilst they are in each group commencing on the 1st day of the following month, without penalty. The change must still be registered with the appropriate Eligibility Committee. Any subsequent change of club for athletes in these age groups will be subject to rule 5(7) below.

(3)

(i) Full time students at recognised establishments of Higher Education shall be eligible to compete in Open Team Competition for their College or University provided that their First claim Club is not competing in that competition. In the case of a league where there is more than one division, this will be deemed to be the same competition for the purpose of this Rule.

(ii) An establishment of Higher Education can only invoke the provisions in (i) above if membership of its Club is solely restricted to students and staff of that establishment.

(4) A first claim member of a Club serving in HM Forces (excluding Territorial and Auxiliary Forces) may, on application to the appropriate Eligibility Committee, be deemed and shall remain during the period of service first claim member of the Forces Club and be eligible to represent only that Club in Open Team Competition confined to first claim members.

(5)Where athletes' first claim Clubs do not include all disciplines listed in 2(4) above, they are eligible to represent an additional first claim Club in any discipline of athletics for which their first claim Club does not cater, following approval from the appropriate Eligibility Committee, commencing on the first day of the following month.

(6) Foreign Athletes. Junior and Senior Men and Women who would not be eligible to compete for Great Britain and Northern Ireland under IAAF Rules, whether permanently or temporarily resident in the country, are only permitted to represent a Club in Open Team Competition as a first claim member if they have been registered with UKA by 1st.January in the year of competition. Such registration may be made at the appropriate time for subsequent registration. The applicant must give as much information as is required and the registration is subject to an annual charge as determined from time to time by the Executive Board of UK Athletics. This Rule does not exclude foreign athletes making application to the Eligibility Committee for relaxation or exemption from the above.

Notwithstanding the above athletes may not compete under these rules until they have been resident in the UK for a minimum of two months prior to the date of competition.

League organisers may decide, in conjunction with UK Athletics, to place a limit on the number of foreign athletes so registered who can compete for an affiliated Club in any given league or other team competition.

NOTE: Athletes possessing dual nationality of Great Britain and Northern Ireland and another country recognised by the I.A.A.F. will be regarded as eligible to seek to represent any Club under the jurisdiction of UKA, unless they represent that other country in international competition when they will henceforth be regarded as an athlete governed by this Rule and will need to seek registration for subsequent seasons. Athletes born in Northern Ireland and resident within the United Kingdom are exempt from the requirement to register even if they have represented the Republic of Ireland in international competition.

(7) Where eligibility is not defined in the paragraph above, athletes are eligible to represent a Club in Open Team Competition when they join their first club as a first claim member. Where athletes have resigned their membership of their previous Club, without claiming hardship exemption, they

are not eligible to represent their next first claim club in any Open Team Competition confined to first claim members until the first day of the month following the expiration of six months from the date of receipt of notice of resignation by the Honorary Secretary of the Eligibility Committee of the Association in which the headquarters of the Club they wish to represent are situated. All such changes myst the registered with that Association.

Where athletes make an application to the appropriate Eligibility Committee claiming exemption under Rule 6 below, the date that they become eligible to compete for their next first claim Club in Open Team competition shall be the first day of the month so determined by that Committee. This period shall not be longer than six months, unless the athlete concerned has provided false information to that Committee. In that event, the time of the granting of such first claim status shall run from the date of receipt of correct information and may be longer, therefore, than six months.

RULE 6 ELIGIBILITY COMMITTEE AND EXEMPTION APPLICATIONS

(1) Each Territorial and National Association shall appoint a Committee consisting of not fewer than five members which shall be called the Eligibility Committee. The Committee shall be responsible for deciding all matters relating to eligibility, including all first claims issues, and for deciding any exemption appeals.

(2) The Eligibility Committee shall have the power, in any case where it considers that the general welfare of athletes or athletics will be best served, to make an exception to the eligibility rules. They may grant exemption, either wholly or in part to these Rules.

(3) Where two Associations are involved there shall be consultation between the Associations before a decision is reached.

(4) Where a transfer of an athlete occurs this must be registered on a standard form which must be sent to the second Association as referred to in Rule 6(3) above, and also to the offices of UKA by the Association recording the change of Club and eligibility.

(5) All applications for relaxation or exemption from the operation of any of the Rules must be accompanied by a fee of £10, which may be refunded at the discretion of the Committee.

(6) Guidelines for considering cases of claims for relaxation or exemption may include:-

(a) Where the proposed change of Club is related to a genuine and significant change of residence. Such grounds are only considered if the application is made within twelve months of the change of residence provided that the new Club is nearer to the new residence, or
(b) Where the original Club is unable to provide the athlete with adequate competition or facilities, or
(c) Where the Club from which the athlete has resigned gives its written support to the move. Such exemption, in whole or part, may be granted on one occasion only, or
(d) Where a specific welfare issue affects the ability of athletes to compete for their original Club.

(7) Where any relaxation or exemption is approved, either wholly or in part, the date for the establishment of first claim status shall be the 1st day of the following month.

(8) Appeals: In the event that an athlete or a Club is dissatisfied with the decision of the Eligibility Committee they shall write to the Chief Executive of UK Athletics, together with a fee of £30 and complete documentary evidence for the application for exemption. The Chief Executive will immediately pass the papers to a UKA appointed panel of five people, of which three members who are not members of the Clubs involved, will consider and determine the Appeal within four weeks. The decision of the panel will be final and binding. A refund of the application fee may be made at the discretion of UKA. No new evidence will be accepted by UKA that has not been submitted to the Association concerned.

RULE 7 AGE GROUPS

(1) The Competition Year for all athletic activities shall extend from 1st October to 30th September in the following year.

(2) The operative date for determining membership of age groups for all athletes under the age of 17 shall be for Track and Field and Race Walking, the 31st August at the end of the Competition Year, and for all other disciplines, the 31st August prior to the commencement of the Competition Year.

NOTE: In Northern Ireland the qualifying date for all disciplines is taken at 31st December at the end of the year of competition.

(3) Track and Field age groups are identified in Rule 107.

(4) Road Running age groups are identified in Rule 207.

(5) Race Walking age groups are identified in Rule 307.

(6) Cross Country age groups are identified in Rule 507.

RULE 8 TEAM EVENTS

(1) In any Open Relay Race Clubs shall not be allowed to enter more than three times the number entitled to compete. A Club entering more than one team in a race shall be allowed to select their teams from the Club entry for that event, but no athlete may compete for more than one team. Teams must be declared before the start of the race.

(2) Ineligibility of a competitor in an Inter-Club or Inter-Team competition does not necessarily disqualify the Club concerned and in such a case the competition shall be decided as if the ineligible competitor had not taken part.

(3) No athletes shall be allowed to compete in a team unless their names have been declared prior to the event. If it is impracticable to issue a programme a complete list of the entries should be provided for the Referee.

RULE 9 COUNTY QUALIFICATION (ENGLAND AND WALES)

(1) County Championships are open to all eligible athletes possessing a County Qualification.

(2) A County qualification may be acquired as follows:

(a) By birth (See also Rule 4(1)).
(b) By nine months' continuous bona fide residence in the County immediately prior to the date of the competition.
(c) By service in a Unit of HM Forces stationed in the County for nine months immediately prior to the date of competition. Residential qualification in the case of anyone serving in the Royal Navy or Royal Marines is determined by the shore establishment, or in the case of a sea-going ship, by the manning port of such ship. Temporary absence on duty shall not break a qualification acquired under this paragraph.

NOTE: A Regimental Depot affiliated to a County Association may include in its team any duly qualified member of a service battalion.

(3) Competitors who have qualified, and competed under 2(b) and (c) retain the qualification until they have acquired residential qualification and competed in the Championship of another County or represented another County in an Inter-County Championship.

(4) A student at school, college or university does not acquire a residential qualification by residence during term time only.

(5) An athlete who has competed in a County Championship, (other than as allowed under 10 below) or represented a County in an Inter-County

Championship, may not compete in the Championship of, nor represent another County in that competition year.

(6) County Inter-Team (including relay) Championships are open to:

(a) Any Club affiliated to the County Association, fulfilling the appropriate requirements of Rule 2(4).
(b) Any Unit of HM Services stationed in the County.
(c) Any school, college or business house in the County.

Every member of a team must hold a County qualification.

(7) A County may, at its discretion, limit Team Championships to affiliated Clubs.

(8) Athletes whose first claim Club is not affiliated to the County Association may compete for their second claim Club in a County Inter-Team Championship if they possess the necessary County qualification. Subject to the application of this Rule athletes may represent their Club from the date of election to the Club.

(9) A Club may affiliate to more than one County.

(10) A County may at its discretion relax the residential qualification in the case of Juniors and younger athletes, and of Seniors in residence at a college or university, but competition in any such events shall not be deemed to have established a County qualification.

(11) Where County boundaries are changed by law, affecting the place of birth or residence of an athlete, moving it from County A to County B the following shall apply:

(a) If athletes have already competed for County A or in the Championships of County A under (2) above, they shall retain the existing birth or residential qualification unless notice is given in writing to the Honorary Secretary of County A that they wish to be qualified for County B.
(b) If athletes have not competed for County A or in a Championship of County A under (2) above the place of birth or residence shall be deemed to have been in County B and any period of residence in County A to have been in County B.

(12) Competitors in an Inter-County Championship must possess a County qualification under (2) above for the County they represent.

RULE 10 TERRITORIAL AND DISTRICT CHAMPIONSHIP QUALIFICATIONS

English Territorial Championships and Representation

(1) Individual Competition

(a) A territorial qualification to compete shall be acquired as follows:

(i) By birth (See also Rule 4(1)).
(ii) By nine months' continuous bona fide residence within the Territorial boundary immediately prior to the date of the competition.
(iii) By nine months' service in HM Forces stationed within the Territorial boundary immediately prior to the date of the competition.

(b) A student at school, college or university does not acquire a residential qualification by residence during term time alone. A Territory, though, may, at its discretion, relax the residential qualification in the case of Juniors and younger athletes, and of Seniors in residence at college or university, but competition in any such events shall not be deemed to have established a Territorial qualification.
(c) No athlete is allowed to compete in the Championships of more than one Territorial Association in any one nine month period.

(2) **Team Competition**

Territorial qualification to compete shall be by first claim membership of a Club affiliated to that Territory.

(3) **Territorial Representation**

Athletes may compete for the Territory provided they are eligible to compete in that Territory's Championships as defined in (1)(a) above.

Scottish District Championships

(4) A District qualification shall be acquired as follows:

(a) By birth.
(b) By residence in the District
(c) By first claim or secondary first claim membership of an affiliated Club with headquarters within the District boundary.

(5) Athletes may only compete at District Championships within one District in any six month period (commencing 1st April and 1st October).

Welsh National Championships

(6) Qualification to compete in the Welsh National Championships shall be acquired as follows:

(a) By birth in Wales.
(b) By birth of one or both parents in Wales
(c) By two year's continuous bona fide residence in Wales immediately prior to the date of the Championships.

NOTE: Having qualified under (c) above and competed for Wales at full senior international level, such qualification may continue until the athlete qualifies and competes for another country.
A student at school, college or university does not acquire a residential qualification by residence during term time alone.

RULE 11 ATHLETES' REPRESENTATIVES

(1) An athletes' representative is any individual who advises or assists athletes in the planning, arranging and negotiation of their athletic programme.

(2) UK Athletics shall authorise, register and have jurisdiction over all Athletes' Representatives acting within its territory, under the terms of IAAF Rule 19 and associated "Guidance Notes for IAAF Members for the Regulation of Federation/Athletes' Representatives", together with any Regulations and Guidelines published by UKA. UK Athletics will only authorise individuals to be Athletes' Representatives.

(3) No athlete is permitted to use the services of any Athletes' Representative not authorised by UKA and any athlete who does so may be subject to sanctions in accordance with UKA and/or IAAF Rules together with any Regulations made thereunder.
Athletes' Representatives require authorisation from UKA when acting as an Athletes' Representative in relation to any athlete, whether or not the athlete concerned is subject to the jurisdiction of UKA or competing within the United Kingdom.

(4) UK Athletics shall establish such procedures as it thinks fit for the authorisation and regulation of Athletes' Representatives. UKA shall be empowered to withdraw, cancel or suspend the authorisation of any Athletes' Representative and all authorised Athletes' Representatives shall comply with such direction(s) that UKA may issue from time to time.

(5) Athletes may use the services of any authorised Athletes' Representative with the prior consent of UKA but no such consent shall be granted and no Athletes' Representative shall receive authorisation unless a contract exists

between the athlete and his/her Representative which contains the minimum terms set out in the Guidance Notes issued both by the IAAF and UKA referred to in paragraph (2) above.

RULE 12 PERMISSION TO PROMOTE

(1) This Rule applies to all disciplines of athletics as defined in Rule 2(4).

(2) UK Athletics must be notified in advance of any event which may be broadcast live or subsequently in accordance with Rule 13 below

(3) The promotion of the following events requires specific permission:
- (a) All Road Running Events.
- (b) All Cross Country, Race Walking, Fell and Hill Running, and Trail Running events.
- (c) All athletics events promoted by a Body or Organisation that is not an affiliated Club, County, District, Territorial or National Association, unless they conform to the exceptions specified in (4) below.

(4) Provided they conform to UKA Rules of Competition and do not fall within 2 or 3(a) above, the following athletic events do not require specific permission under 3(c).
- (a) Events promoted by, and confined to employees (and their relatives) of any particular business entity.
- (b) Events promoted by, and confined to HM Services.
- (c) Events promoted by, and confined to employees (and their relatives) of a County or District Council or other Local Authority.
- (d) Events promoted by, and confined to members of any school or Education Authority, pre-service organisation or recognised juvenile organisation provided that the relevant National or County Association or committee is affiliated to a Territorial or National Association of UK Athletics.

(5) Permission to Promote will be granted by the appropriate Territorial or National Association. The body granting permission may make such procedural arrangements (including delegation to other bodies) for the administration of their powers as they see fit. They shall hereinafter be called the Permitting Authority.

(6) Applications for permission to promote should be made in writing, accompanied by the appropriate fee, to the relevant Permitting Authority. (Applications must be made at least eight weeks before the proposed date of a cross country event, or six months before the proposed date for other promotions) The application shall be made on the standard form approved for the purpose and shall contain such additional detail as the Permitting Authority may require. The Permitting Authority has discretion whether to

grant or refuse permission and shall be entitled to apply to a grant of permission such conditions as it thinks fit.

Event Organisers may appeal against the decision of a Permitting Authority. Notice of Appeal must be sent to UKA within 14 days of receipt of such decision and must be accompanied by a deposit of £30 which will be refundable at the discretion of UKA. The Chief Executive of UKA shall, in a timely manner, pass the papers to a UKA appointed panel which will consider and determine the Appeal within four weeks. The decision of the panel shall be final and binding.

(7) Applications must include undertakings by the applicant to:
- (a) adopt and comply with the UKA Rules for Competition.
- (b) include the words "Under UKA Rules" upon all advertisements, programmes and printed matter issued in connection with the athletic event.
- (c) organise and manage the event to the appropriate standard and to comply with any additional requirements or conditions of the Permitting Authority.
- (d) state in all advertisements, programmes and printed matter that a Permit to Promote has been granted and have the Permit available for inspection at the venue.

(8) Any Body that promotes, or is involved in the promotion of any athletics event in contravention of this Rule shall be liable to disciplinary action (including suspension of membership) and any person taking part in such a competition may thereby be disqualified from competing under UKA Rules.

RULE 13 NOTIFICATION OF EVENTS TO BE BROADCAST

(1) No body involved in the promotion or organisation of athletics, whether or not affiliated to UK Athletics and whether or not resident in the United Kingdom, may permit any athletic event, competition or promotion held in the United Kingdom to be broadcast whether live or subsequently or be directly or indirectly party to such broadcasting without having notified UK Athletics in advance

(2) Notification of any athletic event, competition or promotion to be broadcast must be made in writing to the Executive Board of UK Athletics as soon as possible and in any event, at least nine months prior to the date on which the athletic event, competition or promotion is intended to be held. A notification may be made later than nine months prior to the date of the event, competition or promotion only in exceptional circumstances.

(3) Notification must contain all such details as the Executive Board may require and in particular adequate details (as to date, venue, format, organiser, likely competitors and proposed sponsor) to enable a broadcaster to respond to a proposal. Any changes must immediately be notified to the Executive

Board which may regard any previous notification as void and require a new notification based on the revised details.

(4) No person may permit any athletic event, competition or promotion held in the United Kingdom to be broadcast whether live or subsequently or be directly or indirectly party to such broadcasting unless that event, competition or promotion has been offered to UK Athletics' broadcaster of first choice for broadcasting and UK Athletics broadcaster of first choice has declined to broadcast that event, competition or promotion.

(5) If UK Athletics' broadcaster of first choice has indicated that it would wish to broadcast an event, competition or promotion, the persons or bodies organising or promoting that event, competition or promotion must co-operate with UK Athletics' broadcaster of first choice in relation to all aspects of the organisation, promotion, recording and televising of that event, competition or promotion.

NOTE: UKA aims to raise the profile of the sport to a higher level by obtaining as much broadcast coverage of athletics events as possible and believes that this can best be achieved by a co-ordinated approach to such broadcasting. UKA considers it is in the best interest of all concerned that athletics events, competitions or promotions are televised or recorded for radio or broadcast by any other means by UKA's broadcaster of first choice from time to time.

RULE 14 ENTRIES

(1) Every entry shall be made to the Secretary or other authorised official of the promoting Body.

(2) Any Club, Association or Managing Body has the right to refuse any entry without assigning a reason to the entrant, but the reason must be disclosed to UKA if requested.

(3) No entry either for individual or team events may be made except upon the form of entry issued or approved by the Permitting Authority.

(4) Every entry must be dated and state fully and accurately the particulars required by the official entry form issued or approved by UKA. No one shall be allowed to compete unless an entry form is completed in accordance with this Rule and anyone whose entry form is not so completed shall forfeit the entrance fee.

(5) Every entry must be made in the true, legally registered name of the competitor and this name shall appear on the programme.

(6) Every individual entry shall be signed by the intending competitor, who shall be responsible for all statements therein and any omissions therefrom, whether the athlete actually made the entry or not. Any individual making a false entry shall be dealt with for misconduct.

(7) For twelve months following a change of name, whether by marriage or otherwise, a competitor must include both the new and former names on every entry.

(8) Every entry for an event limited by age shall state the date of birth and present age in years and months of the intending competitor and every such entry shall, if required, be verified by the production of a birth certificate.

(9) Where a team declaration is required for an event, this entry shall be signed by the Secretary or other authorised official of the Club on whose behalf the entry is made, and the Club shall be responsible for the accuracy of the information given by such official. Any affiliated Club making a false entry shall be dealt with for misconduct.

(10) No entry to a competition under UKA Rules may be tendered or accepted unless accompanied by the full amount of the stipulated entry fee.

RULE 15 PROGRAMME AND PUBLISHED MATTER

(1) All advertisements, programmes and printed matter shall state that the meeting or competition is being held "Under UKA Rules".

(2) Promoters of an Open Team event must declare in advance which team awards are included within the event or race and the manner in which they will be decided. In the case of a relay race the distance of each section and the order in which sections are to be run must be similarly declared.

RULE 16 ADVERTISING AND SPONSORSHIP

(1) All advertising and sponsorship contracts (other than the sponsorship of events) with any Club or individual athlete under the jurisdiction of UKA must be registered with UKA.

(2) Advertising on competition clothing by the sponsor of a Club or Association is permitted subject to the following conditions:

(a) The specific design of the advertising material to be used, together with the name of the sponsor(s) shall be submitted by the Club or Association to UKA for prior approval and registration.
(b) The advertising material may appear only on the vest of the Club or Association and/or a tracksuit.
(c) Only one such identification may appear on each vest or tracksuit. The identification shall be a maximum of 40 square cm, with lettering a maximum height of 4cm. The size of the identification is to be measured while worn by the athlete.

(3) In competitions held under UKA Rules (but **not** IAAF Rules) an athlete may wear an identification of a personal sponsor. The identification may

appear only once and must be a maximum of 20 square cm, with any lettering a maximum height of 4cm. If the identification is solely a logo then this must be a maximum of 20 square cm with a maximum height of 5cm.

RULE 17 CLOTHING

(1) In all events competitors must wear at least vest and shorts (or equivalent clothing) which are clean and so designed and worn as not to be objectionable, even if wet.

(2) In team or relay races all competitors must wear registered vests of the same design and colour of the team they are representing, unless the Referee has given permission for a change to be made.

NOTE 1: This Rule does not preclude the possibility of clothing being different in style between participants in the same team e.g. vests of different length, cut of sleeve or collar etc. Any team clothing should, though, still broadly correspond in colour and design notwithstanding these differences.

NOTE 2: Clubs are permitted to have two sets of colours registered at any one time. In team or relay races all competitors should wear registered vests of the same design.

(3) In individual County, District and Territorial Championships, and in National Championships (excluding Road Running) athletes must wear the vest of their first-claim affiliated Club, or their County, Territorial or National vest. The Club concerned must be the one which in terms of Rule 2 (4) caters for that particular discipline of athletics.

NOTE: In exceptional circumstances the Referee may grant permission for an alternative vest to be worn.

(4) Except as is allowed for in Rule 16, competitors are not allowed to take into an arena or course any form of advertising material, nor to display on their person any such advertising other than:

(a) the accepted name of their affiliated Club in lettering which should not exceed 4cm in height. In the case of County or Territorial vests the lettering indicating the name shall not exceed 6cm in height.
(b) a single Trade Mark of the manufacturer of the clothing they are wearing which may appear on the upper body attire. This Mark must not exceed 20 square cm, with the lettering a maximum height of 4cm and the total logo a maximum height of 5cm. On lower body attire the logo shall not exceed 20 square cm with a maximum height of 4cm and may only appear once.

RULE 18 NUMBER CARDS

(1) Competitors shall be supplied with and wear during competition a distinctive number card corresponding with their number in the programme or start list. No competitor shall be allowed to take part in any competition

without wearing the appropriate number card(s) and such card(s) must be worn as issued and not be cut, folded or otherwise concealed or mutilated in any way. In races in excess of 10,000m these cards may be manufactured with perforations to assist the circulation of air, but the perforations must not be made on any of the lettering or numerals which appear on them.

(2) Organisations which have contracts with commercial sponsors for the addition of lettering on number cards to be worn at meetings, are not to allow this lettering to exceed 5cm in height.

(3) Organisers must ensure that the same style of number card is issued to, and worn by, all competitors taking part in the meeting.

RULE 19 BETTING

All betting is strictly prohibited.

RULE 20 CHALLENGE CUPS

(1) A Challenge Prize belongs to the Promoting Body unless won outright, and must be returned by the holder on request, even in the event of the competition not being held or being discontinued.

(2) A Challenge Prize holder who in all respects is eligible to compete has an interest in the trophy and has the right to enter the next competition on satisfactory completion of the appropriate entry form.

RULE 21 ASSISTANCE

(1) The following shall be interpreted as assistance
- (a) Pacing by persons not participating in a race, unless assisting a blind or partially sighted runner.
- (b) Receiving advice or similar assistance during an event from an individual located within the competition area.
- (c) The use of any technical device.

Athletes receiving assistance as defined above are liable to be disqualified.

(2) The following shall not be interpreted as assistance:-
- (a) Communication during an event between athletes, and other persons not within the competition area.
- (b) A medical examination during the progress of an event by medical personnel solely to determine whether an athlete is fit enough to continue in the competition.
- (c) The use of heart monitors in races in excess of 10000m.

RULE 22 MISCONDUCT

(1) Any individual athlete or official of an affiliated Club making a false entry for competition shall be dealt with by the appropriate Association for misconduct.

(2) Any competitor (or other person) interfering or attempting to interfere with the decision of an event official, or indulging in unfair practices or misbehaviour, including the use of offensive or abusive language shall, at the discretion of the Referee, be disqualified from the competition and, if deemed necessary, reported to the appropriate Association for further action. Performances achieved in a competition prior to disqualification shall stand.

(3) Athletes or officials who breach the Rules of Competition or conduct themselves in a manner which may bring discredit to the sport of athletics may be reported to the appropriate Association to take such action as it deems necessary

(4) The Executive Board of UK Athletics may, at its discretion, refer any matter to its Independent Appeals Panel once a decision has been taken by the appropriate National Association.

(5) The Executive Board's decision as to which Association is the appropriate Association to deal with any matter falling within this Rule shall be final and binding.

RULE 23 PROTESTS AND APPEALS

(1) Any protest or objection against the qualification to compete, or the statements in the entry form of another competitor or Club shall be made to the Referee or to the appropriate Association in the manner prescribed in (2) below. When practicable such protest or objection should be made before the date of the competition, or normally within 14 days of the date of the competition.

(2) Every protest or objection lodged under (1) shall be accompanied by a deposit of £10 and shall be made in writing and be signed by the individual objector or by an authorised official. If, upon investigation, the protest or objection shall appear to have been made on no reasonable grounds, the deposit shall be forfeited to the appropriate Association.

(3) The Referee may decide the protest or objection made under (1) on the ground, but if the decision is objected to at the time, the Referee shall be required to refer the matter to the appropriate Association. Any protest or objection referred in this manner shall be decided within one month of receipt by that Association.

(4) In the event of a protest or objection being lodged against a successful competitor, team or Club, the prize or prizes shall be withheld until the protest or objection shall have been finally disposed of in a manner provided for in this Rule. If within a period of three months from the date of the competition the protest or objection shall be sustained the prize or prizes shall be awarded as if the competitor, team or Club objected to had not taken part in the competition.

(5) Any competitor, team or Club may appeal against the decision of the Territorial, National or other appropriate Association. Notice of Appeal must be sent to UKA within 14 days of receipt of such decision and must be accompanied by a further deposit of £50, which will be refundable at the discretion of UKA. The appeal will be determined in accordance with the procedures established by UKA.

(6) Without prejudice to the foregoing, where any dispute exists between any person, or between any person and a National, Territorial or other appropriate Association, or UKA, any party to such dispute may refer the matter for resolution in accordance with the Appeal Procedure established by UKA. Any application for such an appeal must be received within two calendar months of the date of the event or of the decision being contested. UKA shall convene a Hearing within two months of receipt of the Notice of Appeal and shall notify all parties deemed to be involved in the Appeal. No new evidence will be accepted by UKA that has not been submitted previously to the Associations concerned.

RULE 24 DOPING

Doping in or out of competition is strictly forbidden and is an offence.

(For details of the rules, regulations and procedures regarding doping control, together with currently banned substances, refer to the Rules, Procedures and Guidelines on Doping Control produced by UKA).

TRACK AND FIELD COMPETITION RULES

The General Rules 1–24 apply to all Track and Field Competitions.

RULE 100 TEAM EVENTS

(1) Rule 8 applies.

(2) In any Open Team Race Clubs shall not be allowed to enter more than twice the number entitled to compete.

(3) A Club entering more than one team in a race shall be allowed to select their teams from the Club entry for that event.

(4) Promoters must specify, prior to the event, whether Clubs are to declare their teams before the start of the race.

(5) The composition of a team must not be changed after a heat has been run except in the case of injury or illness where the Referee is satisified on medical or other evidence that a competitor is unfit to compete in a subsequent round, when permission may be given for the substitution of another competitor.

(6) Only competitors finishing the full distance are eligible to compete in the final.

(7) At the discretion of the Referee a team may be permitted to start fewer competitors than the minimum number required to score.

(8) Stations shall be drawn and the members of each team shall, if necessary, be lined up behind each other at the start of the race.

(9) The team scoring the least number of points, according to the positions in which the members of the team finish whose positions are to count, shall be the winner; the positions of the non-scoring members of a team, whether it finishes all its members or not, shall be scored in computing the totals of the other teams. In the event of a tie on points, the team whose last scoring member finishes nearest first place shall determine the result.

(10) Alternatively, team position may be decided on the aggregate time of the scoring members of the team, the team having the lowest aggregate being the winner. Time aggregates shall only be used if the Organisers have announced in advance that this method will be used.

(11) In the case of a tie between two or more individual competitors each shall score for the team a number of points obtained by dividing the total sum of their position numbers, reckoned as if they had, instead of being tied, finished regularly in a file, by the number of such competitors. (Thus, for

instance, if two competitors finish tied for second place, each of them shall score $2\frac{1}{2}$ points).

RULE 101 REGISTRATION OF TRACK AND FIELD LEAGUES

(i) UK Track and Field Leagues must be registered with the Track and Field PST, setting out the Consititutions, together with the names, addresses and telephone numbers of their Officers. These details must be updated immediately following each Annual General Meeting of the League.

(ii) National, Territorial and Local Area Track and Field Leagues must be registered with their respective National or Terrorial Association,. setting out their Consititution, together with the names, addresses and telephone numbers of their Officers. These details must be updated immediately following each Annual General Meeting of the League.

(iii) New Track and Field Leagues: Before any new Track and Field Leagues are formed at any level (UK, National, Territorial or Local Area) the organisers must apply to the appropriate Registering Body as identified in (i) or (ii) above before commencing activities. Their application must identify the aims and objectives of the league, include a copy of the draft Constitution, and the names and addresses of those people intending to establish that league. Each new registration must be accompanied by a non-returnable fee of £20.

RULE 102 FOOTWEAR

(1) Competitors may compete in bare feet or with footwear on one or both feet. The purpose of the shoes for competition is to give protection and stability to the feet and a firm grip on the ground. Such shoes, however, must not be so constructed as to give the competitor any additional assistance, and no spring or device of any kind may be incorporated in the shoes. A shoe strap over the instep is permitted.

(2) The sole and the heel of the shoes shall be so constructed as to provide for the use of up to 11 spikes. Any number of spikes up to 11 may be used, but the number of spike positions shall not exceed 11.

(3) When a competition is conducted on a synthetic surface that part of each spike which projects from the sole or the heel must not exceed 9mm, except in the High Jump and the Javelin events where it must not exceed 12mm. These spikes shall have a maximum diameter of 4mm. For non-synthetic surfaces the maximum length of spike shall be 25mm and the maximum diameter 4mm.

(4) The sole and/or heel may have grooves, indentations or protuberances provided these features are constructed of the same or similar material to the basic sole itself.

(5) In the High Jump and Long Jump the sole shall have a maximum thickness of 13mm and the heel in the High Jump shall have a maximum thickness of 19mm. In all other events shoes may be of any thickness.

(6) Competitors may not use any appliance, either inside or outside the shoe, which will have the effect of increasing the thickness of the sole above the permitted maximum or which can give the wearer any advantage which would not be obtained from the type of shoes described in the previous paragraphs.

RULE 103 NUMBERS

(1) Rule 18 applies.

(2) Competitors should be supplied with two number cards to be displayed visibly, one on the breast and the other on the back. Competitors in the High Jump and Pole Vault may wear their number card on the breast or on the back only. Where photo-finish equipment is in use the meeting organisers may require competitors to wear additional numbers of the adhesive type on the side of their shorts facing the camera(s).

(3) In Field Events where competitors wish to take their trials wearing their tracksuit, they must wear their number card(s) on the outside of their tracksuit (or other covering).

RULE 104 DRESSING ACCOMMODATION

(1) Every Promoter of an athletics meeting or competition shall provide adequate changing accommodation for the competitors taking part.

(2) Where a competition for athletes under the age of 15 years is included in the programme of an athletics meeting it is desirable that separate dressing accommodation be provided and reserved for these competitors.

RULE 105 ASSISTANCE

(1) Rule 21 applies.

(2) No attendant shall accompany any competitor within the competition area.

(3) Athletes receiving advice or similar assistance from within the competition area during a Field Event competition must be cautioned by the Referee and warned that for any repetition, they will be debarred from further participation in the competition. Any performance accomplished up to that time shall stand.

RULE 106 PROTESTS

(1) Rule 23 applies.

(2) Any protest or objection by a competitor or team against the conduct or placing of another competitor or team in any competition or relating to any matter which may develop during the carrying out of the programme, shall be made to the appropriate Referee immediately after that competition.

(3) Every protest or objection lodged under (2) shall be made verbally by the individual competitor or by a member of the protesting Club.

(4) The Referee shall decide any protest or objection made under (2) having reviewed all the relevant information, including any available video evidence, and that decision shall be final.

(5) In the event of a protest or objection being lodged against a successful competitor or team, the prize or prizes shall be withheld until the protest or objection has been disposed of in a manner provided for in this Rule.

RULE 107 COMPETITIONS CONFINED TO PARTICULAR AGE GROUPS

(1) The Competition Year shall extend from 1st October to 30th September in the following year.

(2) **Under 13 Boys and Girls (School Years 6 and 7)**

(i) Track and Field competition for Under 13's shall be confined to competitors who are aged 11 or 12 on the 31st August within the Competition Year, as defined in (1) above.

(ii) Other than when competing in a combined event Under 13's may compete in a maximum of 4 events on one day of an athletics meeting, and if so doing, one of these must be a relay. Where a walking event is included in the total, the competitors shall be restricted to a maximum of 3 running or walking events (including any relay) in one day. The total distance covered shall not exceed the maximum listed in Rule 308. If athletes in this age group are competing in a combined event they are not allowed to compete in any other event on the same day.

(iii) Athletes in this age group may compete in track races not exceeding 1500 metres subject to the restrictions in (iv) below. No Under 13 athlete is allowed to compete in any steeplechase event.

(iv) No athlete in this age group is allowed to compete in any race at 300 metres and 400 metres, nor in more than one event between 600 metres and 1500 metres inclusive on the same day.

(v) Under 13's may run against Under 15 Boys or Girls, as appropriate, in track events not exceeding 1500 metres, subject to any limitations as to standard laid down by the organisers. They may not take part in competitions in any other age group.

(vi) Under 13's may compete against Under 15 Boys or Girls, as appropriate, in field events, provided that the implements used by them shall be those laid down for the Under 15 age group. They may not take part in competitions in any other age group.

(vii) No athlete in this age group is allowed to compete in Triple Jump events.

(3) **Under 15 Boys and Girls (School Years 8 and 9)**

(i) Track and Field events for Under 15's shall be confined to competitors who are aged 13 or 14 on 31st August within the Competition Year, as defined in (1) above.

(ii) Other than when competing in a combined event Under 15's may compete in a maximum of 4 events on one day of an athletics meeting, and if so doing, one of these must be a relay. Where a walking event is included in the total, the competitors shall be restricted to a maximum of 3 running or walking events (including any relay) in one day. The total distance covered shall not exceed the maximum listed in Rule 308. If Under 15's are competing in a combined event they are not allowed to compete in any other event on the same day.

(iii) No athlete in this age group is allowed to run in any race in excess of 3000 metres. No Under 15 athlete is allowed to run in any steeplechase event.

(iv) No athlete is this age group is allowed to run in more than one event between 600 metres and 3000 metres inclusive on the same day.

(v) Under 15 athletes may compete against Under 17 Men and Women, as appropriate, in track events not exceeding 1500 metres (but not steeplechase), subject to any limitations as to standard laid down by the organisers. They may not take part in competitions in any other age group.

(vi) Under 15's may compete against Under 17 Men or Women, as appropriate, in field events, provided that the implements used by them shall be those laid down for the Under 17 age group. They may not take part in competitions in any other age group.

(4) **Under 17 Men and Women (School Years 10 and 11)**

(i) Track and Field events for Under 17's shall be confined to competitors who are aged 15 or 16 on 31st August within the Competition Year, as defined in (1) above.

(ii) Other than when competing in a combined event, Under 17's may compete in a maximum of four events on one day of an athletics meeting, and if so doing, one of these must be a relay. If Under 17's are competing in a combined event they are not allowed to compete in any other event on the same day.

(iii) No athlete in this age group is allowed to run in any track event in excess of 5000 metres.

(iv) Under 17 athletes may compete against Juniors or Seniors in track events, including National, Territorial and County Championships, in events not exceeding 3000 metres (including steeplechase), subject to any limitations as to standard laid down by the organisers.

(v) Under 17's may compete against Juniors or Seniors in field events, provided the implements to be used are those laid down for the older age group.

(5) **Under 20 Years Junior Men and Women**

(i) Track and Field events for Juniors shall be confined to competitors who are 17 or over on 31st August within the Competition Year, as defined in (1) above, but Under 20 on 31st December in the calendar year of competition.

(ii) Juniors may not compete in more than five events on the same day of an athletics meeting. If Juniors are competing in a combined event they are not allowed to compete in any other event on the same day.

(iii) Juniors may only run in track events up to and including 10000 metres.

(iv) Juniors may run against Seniors in open track events, including National, Territorial and County Championships, up to and including 10000 metres.

(v) Juniors may compete against Seniors in open field event competitions, including National, Territorial and County Championships, provided that the implements used by them shall be those laid down for Senior competition.

(6) **Seniors**

A Senior is a competitor who is at least 20 years of age on 31st December in the calendar year of competition.

(7) **Masters**

Events for Masters shall be confined to athletes who are at least 35 years of age on the day of competition.

(8) **Mixed Competition and Graded Events**

(i) For competitions held entirely within the stadium mixed events between male and female athletes shall not be permitted except as is provided for in (ii) below.

(ii) The organisers of a graded competition may allow competitors in younger age groups to compete in higher age groups provided that the conditions do not contravene any rules regarding distances or events which may be contested. Mixed graded competitions may also be allowed.

TRACK EVENTS

RULE 108 TRACK MEASUREMENTS

(1) Tracks should be level. For record purposes the maximum allowance for lateral inclination of tracks shall not exceed 1:100, and in the running direction 1:1000 downwards; any inclination shall be uniform.

(2) The inner edge of all tracks must be distinctly marked, cinder and other permanent tracks preferably by a raised border of concrete or other suitable material, 5cm $\pm$ 1.25cm in height and at least 5cm in width. Where it is not possible to have a raised border the inner edge shall be marked with a white line or white tape 5cm in width. All other lanes shall be marked with a white line 5cm in width.

(3) For Championship Events (whether National, Territorial or County), or for any record to be accepted, the inside edge of the track must have a raised border, or be adequately flagged or coned to prevent any competitor running on the line itself. The flags shall be placed on the line at an angle of 60 degrees with the ground, pointing away from the track, at intervals of 4 metres.

The cones shall be placed on the white line so that the edge of the base of the cone coincides with the edge of the white line closest to the track. Wherever possible they should not be more than 4 metres apart.

(4) It is recommended that the direction of running be left hand inside.

(5) In all races where lanes are used the width of each lane shall be not less than 1.22m and not more than 1.25m. The lanes shall be measured for width from the outside edge of one marking line to the outside edge of the next line working outwards from the inner border of the track.

(6) (a) The track must be measured 30cm outwards from the track side of the inner edge if there is a raised border. If there is no raised border the track must be measured 20cm outwards from the track side of the inner edge.

(b) In measuring lanes for distance the inner lane shall be measured as stated in paragraph (a) and the outer lanes 20cm outwards from their respective inner borders.

(7) Races up to 110 metres must be run on a straight course in lanes so as to allow a separate course for each competitor.

(8) Individual races up to and including 400 metres should be run in lanes, with a separate lane for each competitor.

(9) Races over 400 metres and up to and including 800 metres may be run in lanes as far as the end of the first bend.

NOTE: The starting lines will be the same as for 200 metres plus the following distances:

Lane 1 + zero	Lane 5 + 0.145m
Lane 2 + 0.007m	Lane 6 + 0.224m
Lane 3 + 0.034m	Lane 7 + 0.325m
Lane 4 + 0.079m	Lane 8 + 0.444m

(10) In all races run wholly or partly in lanes the start shall be so staggered that the distance from start to finish shall be the same for each competitor.

RULE 109 STATIONS

(1) In all races stations for competitors shall be drawn. In straight sprint races the competitor drawing No. 1 shall take the station on the left facing the winning post, the competitor drawing No. 2 the next station and so on.

(2) In races on a circular track, the competitor drawing No. 1 shall take the station nearest the centre of the ground, the competitor drawing No. 2 the next station and so on.

NOTE: It is recommended that when a curved starting line is being used the inside lane is left unoccupied.

(3) It is recommended that a limit be placed on the number of competitors in races. In general the number should not be so great as to create possible danger or unfairness to any competitor, and if at the beginning of any race the number of competitors appears to be excessive, the Referee, whose decision shall be final, is empowered to order that the competitors be divided into such heats as considered necessary and the event shall be run off accordingly.

(4) In competitions where the composition of heats is printed in the programme, competitors shall not be allowed to compete in any heat other than that in which their name appears; but the Referee, whose decision shall be final, is empowered to permit a departure from this Rule if this is considered just and reasonable.

(5) In races of 3000m, 5000m and 10000m, when considered appropriate and practicable, the competitors may be divided into two groups, with one group of approximately 65% of the competitors using the regular arced start line and the other group using a separate arced start line marked across the outer half of the track. The other group shall run as far as a designated line at the end of the first bend on the outer half of the track before being allowed to gain the inside of the track. The separate arced start line shall be marked in such a way that all the competitors shall run the same distance.

RULE 110 STARTING BLOCKS

(1) The use of starting blocks is permitted in races up to and including 400 metres, including the first leg of a relay race, provided such leg does not exceed 400 metres.

(2) Their use is optional.

(3) Athletes may use their own starting blocks, but such starting blocks must be approved by the Starter.

NOTE: On all-weather tracks the Organisers may insist that only starting blocks provided by them shall be used.

(4) The following rules apply to the construction and use of starting blocks:

(a) They must be constructed entirely of rigid materials.
(b) They may be adjustable but must be without springs or other devices to give artifical aid to the runner.
(c) They must be fixed to the track by a number of pins or spikes, arranged to cause minimum possible damage to the track surface. The arrangement must permit the starting blocks to be quickly and easily removed, and the anchorage must permit no movement during the actual start.
(d) When in position on the track, no part of the starting block must overlap the starting line or extend beyond the lane for that athlete.

(5) When starting blocks are being used both hands must be in contact with the ground when the athlete is in the 'set' position.

RULE 111 THE START

(1) The start of the race shall be denoted by a line 5cm in width at right angles to the inner edge of the track. The distance of the race shall be measured from the edge of the starting line further from the finish, to the edge of the finish line nearer to the start.

(2) In all races not run in lanes the starting line shall be curved so that wherever it occurs on the track all the runners can cover the same distance in the race.

(3) All questions concerning the start shall be in the absolute discretion of the Starter, whose decision is final.

(4) Start Recallers should be appointed at National and Territorial Championships from within the appointed team of Starters. They may also be appointed at other meetings.

(5) Competitors must be placed in their respective stations by Marksmen (Starters Assistants). Marksmen shall assemble competitors 3 metres behind the starting line (or in the case of races run entirely or partly in lanes, behind each starting line) and, once so placed, shall signal to the Starter that all is ready.

If in the opinion of the Starter an athlete has failed to comply within a reasonable time with the instructions of the Marksmen to prepare to come to the assembly line, then it may be considered a false start.

(6) Competitors must not touch the start line or the ground in front of it with their hands or feet when on their mark.

(7) All races (except Time Handicaps) shall be started by the report of a revolver or other similar apparatus and a start shall be made to the actual report. The revolver or similar apparatus shall be fired upwards into the air and it is essential that it should give a satisfactory flash which can be clearly seen by the Timekeepers. The time shall be taken from the flash.

(8) (a) The starter shall first receive a signal from the Chief Marksman that all competitors are ready.

(b) After the Starter has ascertained that the Timekeepers are ready, the following commands shall be given to the competitors:

(i) For competitors running a distance up to and including 400 metres: 'On your marks', 'Set', and when all the competitors are set i.e. motionless on their mark, the revolver shall be fired.

(ii) For competitors running or walking a distance greater than 400 metres: the command shall be 'On your marks', after which the competitors shall approach the start line without touching it, and assume a steady position. Competitors must not touch the ground with their hand or hands. When the steady position has been achieved by all of the competitors the revolver shall be fired.

(9) On the command 'On your marks' (for distances greater than 400m) or 'Set' (for distances up to and including 400m) all competitors shall at once and without delay assume their full and final Set position. Failure to comply with the Starter's command after a reasonable time shall constitute a false start.

(10) When a crouch start is being used competitors must assume a position whereby both hands and at least one knee are in contact with the ground on the "On your marks" command and must maintain the contact with both hands until the start signal is given.

(11) If, for any reason, the Starter has to speak to any of the competitors after the command 'On your marks' and before the revolver or other similar apparatus is fired, or if the concentration of any competitor or the Starter is disturbed before the revolver or other similar apparatus is fired, he or she shall order all competitors to stand up and the Marksmen shall place them on the assembly lines again.

(12) If a competitor after the command 'On your marks' disturbs the other competitors in the race through sound or otherwise, it may be considered a false start.

(13) If a competitor commences a starting motion after assuming a full and final set position, and before the report of the revolver or other similar apparatus, it shall be considered a false start.

(14) Any competitor making a false start must be warned. If a competitor is responsible for two false starts, or three in the case of a Combined Event (Pentathlon, Hexathlon, Heptathlon, Octathlon or Decathlon) that athlete shall be disqualified.

(15) If in the opinion of the Starter, or the Start Recaller, the start was not fair, the competitors must be recalled with a second signal. If the Starter decides that the unfair start was due to one or more competitors 'beating the

start signal', it shall be considered a false start and the Starter must warn the offender or offenders, who shall be disqualified if they continue to offend after one such warning, or two in the case of a Combined Event.

NOTE: In practice, when one or more competitors 'beat the start signal' others are inclined to follow and, strictly speaking, any competitor who does so has beaten the start signal. The Starter should warn only such competitor or competitors who in his or her opinion were responsible for beating the start signal. This may result in more than one competitor being warned. If the unfair start is not due to any competitor no warning shall be given.

RULE 112 THE RACE

(1) In all races run in lanes competitors should keep in their allotted lane from start to finish. If the Referee is satisfied, on the report of a Judge or Umpire, or otherwise, that a competitor has deliberately run out of lane, the Referee shall disqualify that competitor, but if the Referee considers that such action is unintentional, he or she may, at his or her discretion, disqualify if of the opinion that a material advantage was gained thereby. (The table below may be used for guidance in determining the advantage gained). This Rule shall also apply to any portion of a race run in lanes.

NOTE: When an Umpire observes that an athlete has run out of his or her lane, it is recommended that the Umpire marks the track itself, or a diagram of the track, in order to identify exactly where the infringement took place.

Track 400 metres Stride 2.30m	Advantage Gained by Encroaching *t* cm on Inside of Lane			
Number of Strides	t = 50mm	t = 100mm	t = 150mm	t = 300mm
	mm	mm	mm	mm
1	4	7	11	22
2	7	14	22	44
3	11	22	33	66
4	14	29	44	88
5	18	36	54	109
6	22	44	65	131
7	25	51	76	153
8	29	58	87	175
9	33	65	98	197
10	36	72	109	219

This table shows, mathematically, the theoretical advantage gained by taking from 1 to 10 strides inside the inner border of a lane. The distances are shown in millimetres, e.g. four strides 150mm inside gives an advantage of 44mm.

(2) Any competitor jostling, running or walking across, or obstructing another competitor so as to impede progress shall be liable to disqualification.

(3) A competitor after voluntarily leaving the track or course shall not be allowed to continue in the race.

(4) The final lap shall be signalled to each competitor, usually by ringing a bell. In races longer than 1500 metres a lap scorer(s) shall be appointed by the Referee, who shall keep a record of the laps covered by each competitor.

(5) The Referee shall have the power to order a race to be re-held when he or she considers it just and reasonable to do so. If in any heat a competitor is disqualified the Referee shall have the power to permit any competitor affected by the act resulting in the disqualification to compete in a subsequent round of the event.

(6) No person except an official Timekeeper or other person appointed to do so by the Chief Timekeeper shall:

(a) indicate intermediate times to competitors;
(b) give times to be announced over the public address system.

(7) In races of 200m or less the wind velocity should be measured and recorded whenever possible, and this is essential in the case of a record claim. The gauge should be set up parallel to the track, 50m from the finish line, not more than 2m from the edge of the track adjacent to lane 1, and at a height of approximately 1.22m. Where a tubular wind gauge is used the length on either side of the measuring device should be at least twice the diameter of the tube.

(8) The periods for which the wind component should be measured are:

All distances up to and including 100m	10secs
100m Hurdles and 110m Hurdles	13secs
200m. commencing as the runners enter the straight	10secs
(See also Rule 141(14), (15) and (19)).	

(9) The wind gauge shall be read in metres per second, rounded to the next higher tenth of a metre per second in the positive direction. (For example: a reading of +2.03m/sec. shall be recorded as +2.1m/sec.: a reading of -2.03m/sec shall be recorded as -2.0m/sec.).

RULE 113 THE FINISH

(1) The finish shall be a line 5cm in width drawn across the track at right angles to the inner edge.

(2) Two white posts shall denote the extremities of the finish line and shall be placed at least 30cm from the edge of the track. The finish posts shall be of rigid construction of about 1.4m in height, 80mm in width and 20mm in thickness.

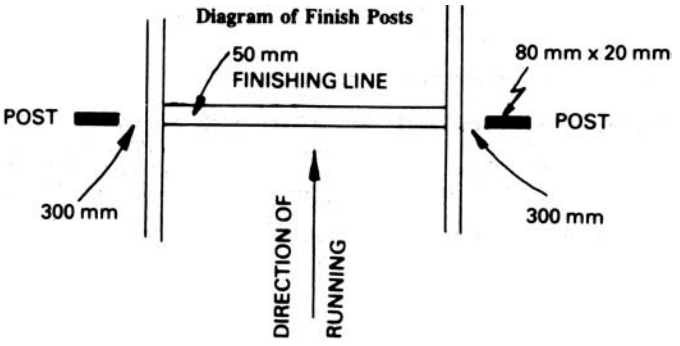

(3) The competitors shall be placed in the order in which any part of the torso (as distinguished from head, neck, arms, hands, feet and legs) reaches the vertical plane of the edge of the finish line nearer to the start.

RULE 114 TIES

(1) In the event of a tie in any heat which affects the qualification of competitors to compete in the next round or final, where practicable, the tying competitors shall all qualify, failing which they shall compete again to decide the qualifiers.

(2) In the case of a tie for first place in any final, the Referee is empowered to decide whether it is practicable to arrange for the competitors so tying to compete again. If the Referee decides that it is not, the result shall stand. Ties in other placings shall remain.

RULE 115 QUALIFICATION FROM PRELIMINARY HEATS

(1) In the preliminary rounds of races, at least the winner, and preferably the winner and second should qualify for the next round or final. Any other competitors to qualify shall be decided either according to their places or according to their times. Where any qualifying position is decided by time only one system of timing may be applied in determining times. Where photo-finish equipment is in use the Chief Photo-Finish Judge shall consider, where necessary, the actual time recorded in 1/1000ths of a second by the competitor in deciding qualifiers by time.

(2) The following minimum times must be allowed between the last heat of the round and the first heat of the subsequent round or final.

	Minimum minutes rest
Up to 100 metres	20
Over 100m and up to 200m	40
Over 200m and up to 400m	60
Over 400m and up to 800m	80
Over 800m	100

(3) In any athletics meeting competitors shall be excluded from participating in further events, including relays, when they have qualified in preliminary rounds or heats (including a qualifying round or pool in a Field Event) for further participation in any event but then do not compete further without giving a valid reason to the Referee. If a meeting extends over more than one day the exclusion shall apply to all subsequent events of the meeting.

RULE 116 HURDLE RACES

(1) All hurdle races shall be run in lanes and competitors shall run only in their own lane throughout.

(2) A hurdle shall consist of two uprights, or standards, supporting a rectangular frame or gate and should have a level top rail.

(3) The total weight of the hurdle shall be not less than 10kg.

(4) The width of the hurdle shall be from 1.18m to 1.20m and the extreme length of the base shall be 70cm. The top bar shall be 70mm in width and should be between 10mm and 25mm thick. The top bar should be striped in black and white, or in some other contrasting colours in such a manner that the lighter stripes appear at the end of the hurdle and that they shall be at least 225mm in width.

(5) The hurdle shall be made of wood or metal and shall consist of two bases and two uprights supporting the rectangular frame reinforced by one or more cross-bars, the uprights to be fixed at the extreme end of each base.

(6) The hurdle may be adjustable in height but should be rigidly fastened at the required height for each event.

(7) The hurdles shall be so placed on the track that the ends carrying the uprights shall be farthest from, with the counter-weights nearest to, the starting line, and the edge of the bar nearest the approaching hurdler coinciding with the track marking nearest the athlete.

(8) The hurdle shall be of such design that a force of at least 3.6kg applied to the centre of the top of the cross-bar is required to overturn it. Where an adjustable hurdle is used the counter-weights must be adjustable to the effect that in every position relating to the height of the hurdle the force required to overturn the hurdle when adjusted shall be at least 3.6kg and not more than 4kg.

NOTE: To check the resisting force of hurdles, a simple spring balance should be used by the application of a pulling force to the centre of the top of the cross-bar. Alternatively, use a cord with a hook, applied to the centre of the top of the cross-bar. Take the cord along over a pulley fixed conveniently and load the other end of the cord with the appropriate weights.

(9) The force required to overturn hurdles for Under 17 Men and Women and younger age groups shall be at least 2.7kg and not more than 3kg.

(10) Where hurdles are used which overturn with less force than the minimum specified in (8) or (9) above as appropriate, the competitors shall be informed that an athlete knocking down three or more hurdles, or any part of three or more hurdles, shall be disqualified.

(11) Where hurdles comply with (8) or (9) above, as appropriate, knocking down any number of hurdles shall not disqualify, nor shall it disentitle a competitor from claiming a record.

EXAMPLE OF APPROVED HURDLE

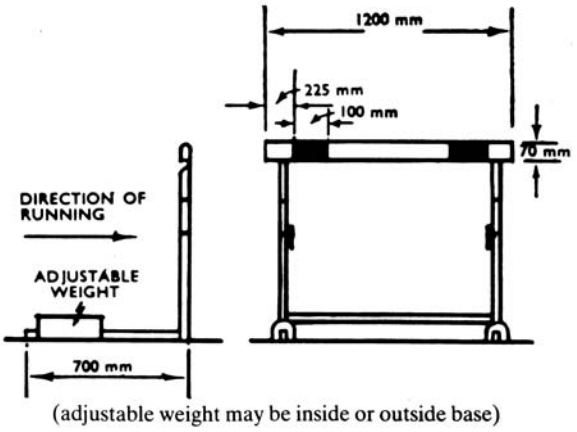

(adjustable weight may be inside or outside base)

(12) Athletes shall be disqualified if, in the opinion of the Referee, they:
- (a) trail a foot or leg below the plane of the top of the bar at the instant of clearing,
- (b) negotiate any hurdle not in their lane,
- (c) deliberately knock down any hurdle,
- (d) fail to attempt to clear any hurdle i.e. runs around the hurdle.

(13) Specifications for particular hurdle events are:

Distance of race	Height of hurdle	Distance to 1st flight	Distance between flights	Distance to finish	Number of hurdles	Standard Track Marking Colour
MEN'S EVENTS						
Seniors (3.6kg Toppling Weight)						
110m	106.7cm	13.72m	9.14m	14.02m	10	Blue
400m	91.4cm	45m	35m	40m	10	Green
Juniors (3.6kg Toppling Weight)						
110m	99.0cm	13.72m	9.14m	14.02m	10	Blue
400m	91.4cm	45m	35m	40m	10	Green
Under 17 (2.7kg Toppling Weight)						
100m	91.4cm	13m	8.5m	10.5m	10	Yellow
400m	84.0cm	45m	35m	40m	10	Green
Under 15 (2.7kg Toppling Weight)						
80m	84.0cm	12m	8m	12m	8	Black
Under 13 (2.7kg Toppling Weight)						
75m	76.2cm	11.5m	7.5m	11m	8	Orange
WOMEN'S EVENTS						
Seniors and Juniors (3.6kg Toppling Weight)						
100m	84.0cm	13m	8.5m	10.5m	10	Yellow
400m	76.2cm	45m	35m	40m	10	Green
Under 17 (2.7kg Toppling Weight)						
80m	76.2cm	12m	8m	12m	8	Black
300m	76.2cm	50m	35m	40m	7	Green
Under 15 (2.7kg Toppling Weight)						
75m	76.2cm	11.5m	7.5m	11m	8	Orange
Under 13 (2.7kg Toppling Weight)						
70m	68.5cm	11m	7m	10m	8	Pink
VETERANS' EVENTS						
Mens 40-49 (3.6kg Toppling Weight)						
110m	99.0cm	13.72m	9.14m	14.02m	10	Blue
400m	91.4cm	45m	35m	40m	10	Green
Men 50-59 (3.6kg Toppling Weight)						
100m	91.4cm	13m	8.50m	10.5m	10	Yellow
(2.7kg Toppling Weight)						
400m	84.0cm	45m	35m	40m	10	Green
Men 60-69 (2.7kg Toppling Weight)						
100m	84.0cm	16m	8m	12m	10	—
300m	76.2cm	50m	35m	40m	7	Green
Men 70-79 (2.7kg Toppling Weight)						
80m	76.2cm	12m	7m	19m	8	—
300m	68.5cm	50m	35m	40m	7	Green

Distance of race	Height of hurdle	Distance to 1st flight	Distance between flights	Distance to finish	Number of hurdles	Standard Track Marking Colour
Men 80 and over (2.7kg Toppling Weight)						
80m	68.5cm	12m	7m	19m	8	—
Women 40-49 (2.7kg Toppling Weight)						
80m	76.2cm	12m	8m	12m	8	Black
400m	76.2cm	45m	35m	40m	10	Green
Women 50-59 (2.7kg Toppling Weight)						
80m	76.2cm	12m	7m	19m	8	—
300m	76.2cm	50m	35m	40m	7	Green
Women 60 and over (2.7kg Toppling Weight)						
80m	68.5cm	12m	7m	19m	8	—
300m	68.5cm	50m	35m	40m	7	Green

(14) Specifications for Indoor Hurdle events are:

Distance of race	Height of hurdle	Distance to 1st flight	Distance between flights	Distance to finish	Number of hurdles	Toppling Weight
MEN'S EVENTS						
Seniors						
50m	106.7cm	13.72m	9.14m	8.86m	4	3.6kg
60m	106.7cm	13.72m	9.14m	9.72m	5	3.6kg
Juniors						
60m	99.0cm	13.72m	9.14m	9.72m	5	3.6kg
Under 17						
60m	91.4cm	13m	8.5m	13m	5	2.7kg
Under 15 Boys						
60m	84.0cm	12m	8m	16m	5	2.7kg
Under 13 Boys						
60m	76.2cm	11.5m	7.5m	18.5m	5	2.7kg
WOMEN'S EVENTS						
Seniors and Juniors						
50m	84.0cm	13m	8.5m	11.5m	4	3.6kg
60m	84.0cm	13m	8.5m	13m	5	3.6kg
Under 17						
60m	76.2cm	12m	8m	16m	5	2.7kg
Under 15 Girls						
60m	76.2cm	11.5m	7.5m	18.5m	5	2.7kg
Under 13 Girls						
60m	68.5cm	11m	7m	21m	5	2.7kg

NOTE: In each case there shall be a tolerance of 3mm above and below the standard height to allow for variation in manufacture.

RULE 117 STEEPLECHASE RACES

Only Seniors, Juniors and Under 17's are allowed to contest any steeplechase event.

(1) The hurdle may be made of heavy timber or of metal with a bar of heavy timber. In either case it must be constructed in such a way that it may not be easily overturned.

(2) The hurdle shall be 91.4cm in height for Mens' competition, and 76.2cm for Women's competition, and should be at least 3.94m in total width. The section of the top bar of the hurdle should be 12.7cm square.

(3) The weight of each hurdle should be between 80kg and 100kg.

(4) The hurdle shall be placed on the track so that about 30cm of the top bar, measured from the inside edge of the track, will be inside the field (i.e. the top bar will overlap the track edge).

(5) The top bar should be striped in black and white or in some other contrasting colours in such a manner that the lighter stripes appear at the end of each hurdle, and the stripes should be at least 30cm wide.

Specifications of approved heavy timber hurdle for Men's competition

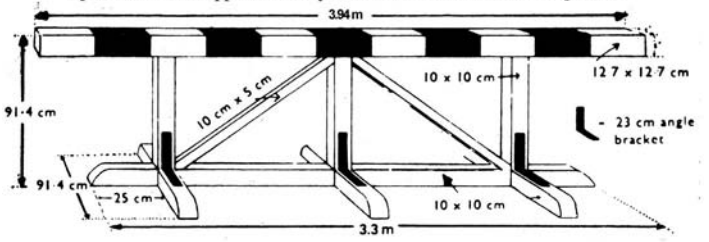

Specifications of approved hurdle with metal base for Men's competition

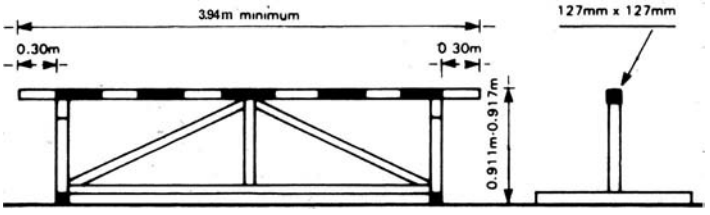

NOTE: In the case of all hurdle heights there shall be a tolerance of 3mm above and below the height specified to allow for variation in manufacture.

(6) The hurdle at the water jump must be firmly fixed and shall be 91.4cm in height for Men's competition and 76.2cm for Women's competition. The hurdle shall be 3.66m in total width whilst the section of the top bar should be 12.7cm square.

(7) The water jump, including the hurdle, shall be 3.66m in length. The width of the water jump shall be 3.66m. The water shall be 70cm in depth at the hurdle end, remaining at this depth for a distance of 30cm and then sloping to the level of the track at the farther end.

Steeplechase Water Jump – simplified diagrams

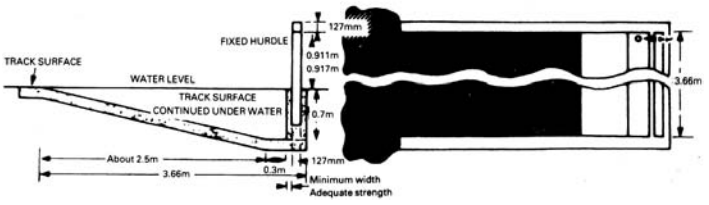

To ensure safe landing of the competitors, the bottom of the water jump should be covered at the further end with suitable material, at least 3.66m wide and 2.5m long, the thickness of which should not exceed approximately 25mm.

(8) Each athlete shall go over or through the water. Athletes shall be disqualified if they:

(a) do not attempt to clear any hurdle i.e. by running round the hurdle
(b) step to one side or other of the water jump when landing
(c) trail their foot or leg below the horizontal plane of the top of any hurdle at the instant of clearing.

Providing this Rule is observed an athlete may go over each hurdle in any manner. They may jump or vault over any hurdle and may place a foot or feet on any hurdle, including the one at the water jump.

(9) The standard events are:

Distance of Race	Age Group	Number of Hurdles	Number of Water Jumps	Distance from start to first hurdle
3000m	Senior Men Senior Women Junior Women Veteran Men Under 60	28	7	257.8m
2000m	Junior Men Senior Women Junior Women Veteran Women	18	5	203.8m

	Veteran Men 60 & over			
1500m	Under 17 Men	13	3	255.8m
	Under 17 Women			

NOTE: Owing to the water jump having to be constructed on the arena inside or outside the track, thereby shortening or lengthening the normal distance of the lap, it is not possible to lay down any rule specifying the exact length of the lap or state precisely the position of the water jump.

It should be borne in mind that there must be enough distance from the starting line to the first hurdle to prevent competitors from overcrowding and there should be approximately 62.2m from the last hurdle to the finish line.

The water jump should be, where possible, the fourth jump in each lap. If necessary, the finish line should be moved to another part of the track.

The following measurements are given as a guide and any adjustments necessary should be made by lengthening or shortening the distance at the starting point of the race. It is assumed that a lap of 400 metres has been shortened by 6 metres by constructing the water jump inside the track.

(10) **3000 Metres**

Distance from starting point to commencement of 1st lap, to be run without jumps	242.0m
Distance from commencement of 1st lap to 1st hurdle	15.8m
From 1st to 2nd hurdle	79.0m
From 2nd to 3rd hurdle	79.0m
From 3rd hurdle to water jump	79.0m
From water jump to 4th hurdle	79.0m
From 4th hurdle to finishing line	62.2m
7 laps of 394m =	2758.0m
plus	242.0m
	3000m

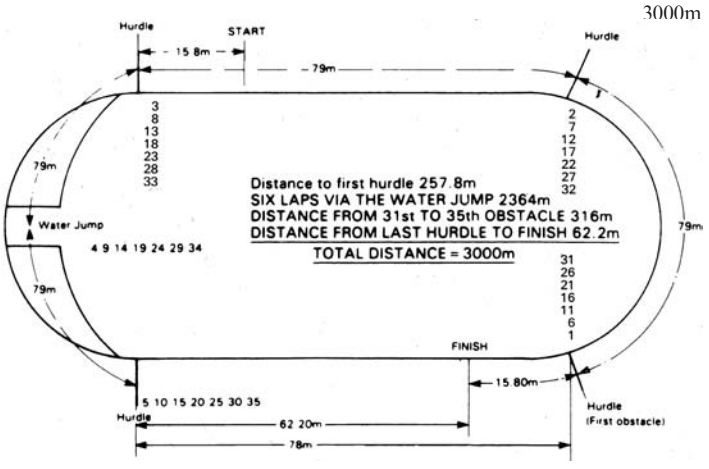

(11) **2000 Metres**

(If the course is laid out with a lap of 394m.)

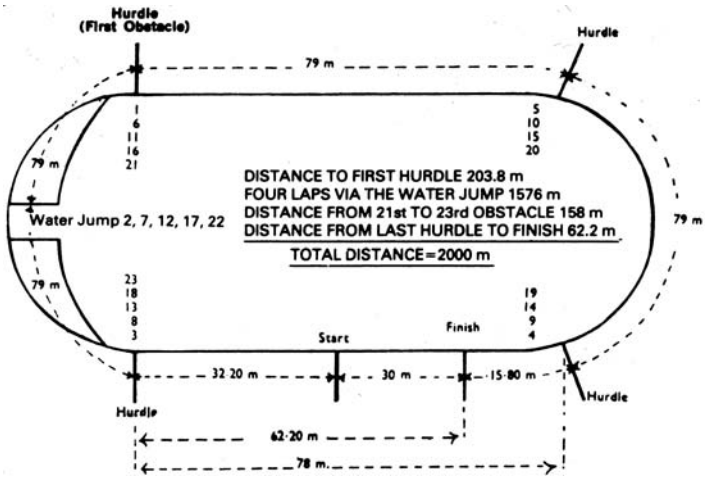

(12) **1500 Metres**

(If the course is laid out with a lap of 394m.)

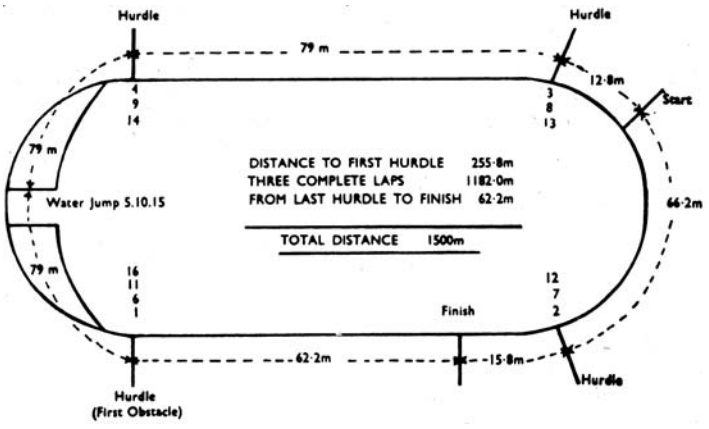

RULE 118 RELAY RACES

(1) Lines 5cm wide shall be drawn across the track to mark the distances of the stages and to denote the scratch line. Each take over zone shall be 20m long of which the scratch line is the centre. The zones shall start and finish at the edges of the zone lines nearest the start line in the running direction.

(2) Except for the first runner, where the stage to be run does not exceed 200 metres, the outgoing runners may commence their run not more than 10m outside the take-over zone; where the stage exceeds 200 metres the outgoing runners must commence their run within the take-over zone. Additional lines in a different colour from that used for the take-over zone markings should be drawn to indicate the additional 10m zone at all change-over points.

(3) The positions of the teams at the start of the race shall be drawn and shall be retained at each take-over zone, except that, in races where lanes are not used or have ceased to operate, waiting runners can move to an inner position on the track as incoming team-mates arrive, provided this can be done without fouling.

(4) When relay races up to and including 400 metres are contested on a circular track each team should, if possible, have a separate lane and each lane must be the full distance.

(5) Where the first section of a relay race is 200 metres or 400 metres, the first 400 metres section(s) should, if possible, be run in lanes with staggered starts. Alternatively, where the first section of a relay is 400 metres, lanes shall cease to operate at the beginning of the back straight on either the first or second lap.

(6) In events where the first lap only is run in lanes, competitors after leaving the take-over zone are free to take up any position on the track.

(7) In sprint relay races up and down a track the take-over is by touch, contact being made within a clearly defined area of 1m beyond, and at each end of, the relay distance.

(8) When a relay race is being run in lanes competitors may place one check mark on the track within their own lane but may not place, or cause to be placed, any marking object on or alongside the track. On a synthetic surface, chalk or similar substances which leave indelible marks must not be used.

(9) The baton must be carried in the hand throughout the race. If dropped, it must be recovered by the athlete who dropped it, who may leave the lane in order to retrieve the baton. Provided this procedure is adopted, no other athlete is impeded, and by so doing the distance of the race is not lessened, dropping the baton shall not result in disqualification.

(10) The baton must be passed only within the take-over zone. The passing of the baton commences when it is first touched by the receiving runner and is completed the moment it is in the hands of the receiving runner only. Within the take-over zone it is only the position of the baton which is decisive, and not the position of the body or limbs of the competitors. Passing of the baton outside the take-over zone will result in disqualification.

NOTE: To assist the judges, it is recommended that the batons be of distinctive colours.

(11) Competitors after handing-over the baton should remain in their lanes or zone until the course is clear to avoid obstruction to other competitors. Should any competitor wilfully impede a member of another team by running out of position or lane at the finish of a stage that competitor is liable to cause the disqualification of his or her own team.

(12) Assistance by pushing-off or by any other methods will cause disqualification.

(13) On completion of the final leg the baton is to be handed to an official by the last runner. It is not to be dropped or thrown from the hand. Failure to comply with this instruction may lead to disqualification.

(14) Once a relay team has started in a competition only two additional athletes may be used as substitutes in the composition of that team for any subsequent round.

(15) No competitor may run two sections for a team.

(16) The relay baton shall be a smooth hollow tube circular in section made of any rigid material in one piece, the length of which shall not be more than 30cm or less than 28cm. The circumference shall be 12-13cm and the weight shall not be less than 50 grammes. In relay races for Under 13's batons of smaller dimensions may be used.

RULE 119 TIMING & PHOTO-FINISH

(1) Two methods of timekeeping shall be recognised as official:-
  (a) Hand timing
  (b) Fully automatic timing obtained from a photo-finish system.

(2) The time shall be taken from the flash/smoke of the gun or approved starting apparatus (hand timing), or the impulse from the gun or approved starting apparatus (photo-finish) to the moment at which any part of the body of the competitor (i.e. torso, as distinguished from the head, neck, arms, legs, hands or feet) reaches the perpendicular plane of the nearer edge of the finish line. (Rule 113).

Hand Timing

(3) The Timekeepers shall be in line with the finish and outside the track. Wherever possible, they should be placed at least 5 metres from the outside lane of the track. In order that they may all have a good view of the finish line, an elevated stand should be provided.

(4) Timekeepers shall use either stopwatches or manually operated electronic timers with digital readouts. All such timing devices are termed "watches" for the purpose of these Rules.

(5) Times for all finishers should be recorded. In addition, whenever possible, lap times in races of 800m and over, and times at every 1000m in races of 3000m and over, should be recorded by designated members of the Timekeeping team. Such information is essential in the case of a National record claim.

(6) Each Timekeeper shall act independently and without showing the watch to, or discussing the time with, any other person, shall declare the recorded time to the Chief Timekeeper who may examine the watch to verify the reported time, and must do so if a National record claim is involved.

(7) For all hand-timed races on the track, times shall be read to the next longer 1/10th of a second. The times for races held partly or entirely outside the stadium shall be converted to the next longer full second, e.g. for the marathon 2: 09: 44.3s shall be returned as 2: 09: 45.

If the hand of the watch stops between two lines indicating the time, the longer time shall be accepted. If a 1/100ths of a second watch, or an electronic manually operated digital timer, is used, all times not ending in zero in the second decimal shall be rounded to the next longer 1/10th of a second, e.g. 10.11s shall be read as 10.2s.

(8) Unless satisfied that a mistake has been made the Chief Timekeeper shall declare the time in accordance with the following conditions:-

(a) If two of the three Timekeepers agree and the third disagrees, the time recorded by the two shall be the official time.
(b) If all three Timekeepers disagree the middle time shall be official.
(c) Should only two times be available and they differ, the longer time shall be official.

(9) In the event of a National record claim the time should be taken by three Graded Timekeepers, each of whom should be Grade 1 or 2 (Level 5 or 4). They must show their timings to the Chief Timekeeper and certify these times on the appropriate Record Application form.

Fully Automatic Photo-finish

(10) Fully automatic photo-finish equipment approved by UK Athletics may be used at any competition.

General Conditions

(11) The photo-finish system must record the finish through a camera with a vertical slit, positioned in the extension of the finish line, producing a continuous image when activated.

(12) The image must be synchronised with a uniformly marked time-scale graduated in 1/100ths of a second.

(13) The times and places must be read from the image with a cursor guaranteeing perpendicularity between the time scale and the reading line.

(14) The photo-finish system must be able to produce a printed picture which shows the time of every competitor.

(15) The timing mechanism shall be started automatically by the Starter's gun or approved starting apparatus and the equipment must record the finish times of the athletes automatically.

(16) If the timing mechanism is not started by the signal from the Starter's gun or approved starting apparatus, the time-scale on the picture produced shall indicate this fact automatically. In this case, the times read from the picture will not, under any circumstances, be considered as official, but the image may be used as a valid support in order to determine places and adjust time intervals between athletes.

(17) Fully automatic photo-finish equipment shall be approved by UK Athletics, based on a test of accuracy made within four years prior to the competition. It shall be started automatically from the Starter's gun or other approved starting apparatus, so that the overall delay between the report from the muzzle and the start of the timing system is constant and less than one millisecond.

Operation

(18) The Chief Photo-finish Judge shall be responsible for the correct functioning of the equipment.

(19) Before the start of the meeting, the Chief Photo-finish Judge will meet the technical staff involved and should supervise the positioning and testing of the equipment.

(20) Where more than one photo-finish cameras is in action, each system should be technically independent, i.e. with different power supplies and recording and relaying the report of the Starter's gun or approved starting apparatus, by separate equipment and cables.

(21) The Chief Photo-finish Judge, in cooperation with the Referee for track events and the Starter, should, whenever possible, initiate and supervise a control before the start of the meeting, to ensure that the equipment is started automatically by the Starter's gun or approved starting apparatus, and that it is correctly aligned.

(22) In conjunction with the Assistants, the Chief Photo-finish Judge shall determine the places of the competitors and their respective times. Where a computerised result system is used, the official placings and times of the competitors may be entered directly into the computerised system under the direction of the Chief Photo-finish Judge.

(23) Times from the photo-finish camera shall be regarded as official unless for any reason the Chief Photo-finish Judge decides that they obviously must be inaccurate. If such is the case, the Chief Timekeeper shall provide the times recorded by the back-up Timekeepers in accordance with (8) above, and these shall be official. Such back-up Timekeepers must be appointed where any possibility exists of failure of the timing device.

(24) Times shall be read from the photo-finish picture as follows:

(a) For all races up to and including 10,000m, the time shall be read and recorded from the photo-finish picture in 1/100th second.

(b) For all races on the track longer than 10,000m, the time shall be read in 1/100th second. All read times not ending in zero shall be converted and recorded to the next longer 1/10th second, e.g. for 20,000m a time of 59m 26.32s shall be recorded as 59m 26.4s.

(c) For all races held partly or entirely outside the stadium, the time shall be read to 1/100th second. All times not ending in two zeros shall be converted to the next longer whole second, e.g. for the Marathon a time of 2h 09m 44.32s shall be recorded as 2h 09m 45s.

(d) The Chief Photo-finish Judge shall consider, where necessary, the actual time recorded in 1/1000ths of a second by a competitor in deciding qualifiers by time.

(25) A timing device which operates automatically at either the start or the finish but not at both, shall be considered to produce neither hand nor fully automatic times and shall not therefore be used to obtain official times.

(26) In the event of a National record claim the Chief Photo-finish Judge shall sign the Record Application form and attach a copy of the photo-finish image. Where such an image is available, no details of the manually recorded back-up times are required to be entered on the form.

FIELD EVENTS

RULE 120 GENERAL CONDITIONS

Draws, Trials and Qualifying Rounds

(1) A draw shall be made to decide the order in which competitors shall take their trials and this order should be printed in the programme. The Judges shall have the power to alter this order. Competitors cannot hold over any of their trials to a subsequent round, except in the High Jump and Pole Vault.

(2) If competitors are entered in both a track event and a field event or in more than one field event taking place simultaneously, the Judges may allow them to take their trials in an order different from that decided upon prior to the start of the competition.

(3) In throwing or jumping for distance no competitor is allowed to have more than one trial recorded in any one round of the competition.

(4) Competitors who unreasonably delay making a trial in a field event render themselves liable to having that trial disallowed and recorded as a fault.

(5) It is a matter for the Referee to decide, having regard to all the circumstances, what is an unreasonable delay. The following times should not normally be exceeded:.

Number of athletes left in the competition	High Jump	Pole Vault	Other Events
More than 3	1 min	1 min	1 min
3 or fewer	1.5 min	2 min	1 min
Consecutive trials by the same athlete	2 min	3 min	2 min

In the Pole Vault the time shall begin when the uprights have been adjusted to the previously notified wishes of the competitor.

If the time allowed as indicated above elapses after the competitor has started a trial, that trial shall not for that reason be disallowed.

(6) If in the opinion of the Referee the conditions warrant it, that official shall have power to change the place of the competition in any field event. Such a change should be made only after a round is completed.

(7) If for any reason a competitor is hampered in a trial in a field event, the Referee shall have power to award a substitute trial.

(8) Where in any of the field events the Organisers or the Referee consider it advantageous a qualifying round shall be held prior to the competition proper.

(a) All competitors who reach the prescribed standard in the qualifying round or pool shall compete in the competition proper. If less than the prescribed number of competitors reach the qualifying standard then the leading athletes up to that prescribed number shall take part in the competition proper; where necessary Rules 121(7), 126(3) or 130(3) shall be used to decide the qualifiers. If a tie for the final place in the competition remains after these Rules have been applied, all those competitors so tying shall be included in the competition proper.

(b) In each qualifying round each competitor shall be allowed three trials (High Jump and Pole Vault excepted) but the performance accomplished shall not be considered part of the competition proper. Once competitors have reached the qualifying standard they shall not take any more trials.

(9) If qualifying rounds or pools are held the order for taking trials in the competition proper shall be determined by a fresh draw.

When in accordance with the Rules the best competitors are allowed three more trials, they shall take their trials in the same order as was drawn for the first three rounds.

(10) In any athletics meeting competitors shall be excluded from participating in further events, including relays, when they have qualified in preliminary rounds (including qualifying rounds or pools in field events) or heats for further participation in any event but then do not compete further without giving a valid reason to the Referee. If a meeting extends over more than one day the exclusion shall apply to all subsequent events of the meeting.

NOTE: This is not to be read as infringing the rights of competitors qualified under Rules 126(1)(b) or 130(1)(b) from opting out of one or more of their additional trials since they have already qualified for inclusion in the final result.

(11) Once a competition has begun competitors are not permitted to use runways or take-off areas for practice or warm up purposes nor are they permitted to use throwing sites for practice trials, with or without implements.

VERTICAL JUMPS
(HIGH JUMP AND POLE VAULT)

RULE 121 GENERAL CONDITIONS

(1) Unless such details are specified in the programme, the Judge shall decide the height at which the competition shall start, and the different heights to which the bar will be raised at the end of each round. The competitors shall be informed of the details before the competition begins.

(2) Competitors may commence jumping/vaulting at any of the heights above the minimum height and may jump/vault at their own discretion at any subsequent height. Three consecutive failures, regardless of the height at which any such failure occurs, disqualify from further participation, except in the case of a jump-off of a first place tie.

NOTE: The effect of this Rule is that competitors may forego their second and third jumps/vaults at a particular height (after failing once or twice) and still jump/vault at a subsequent height. If competitors forego a trial at a certain height, they may not make any subsequent attempt at that height except in the resolution of a tie.

(3) Even after all the other competitors have failed, a competitor is entitled to continue until he or she has forfeited the right to compete further, and the best jump/vault shall be recorded as the winning height.

(4) After the competitor has won the competition the height or heights to which the bar is raised shall be decided after the Judge or Referee in charge of the event has consulted the wishes of the competitor.

NOTE: This does not apply for Combined Events Competitions where the increases in height shall be uniformly 3cm in the High Jump and 10cm in the Pole Vault throughout the competition.

(5) All measurements shall be made perpendicularly from the ground to the upper side of the cross-bar where it is lowest. A steel or fibre glass tape should be used. Alternatively a scientific apparatus which has a certificate of accuracy from a nationally recognised standardising organisation may be used. Any measurement of a new height shall be made before competitors attempt that height. In the case of a record claim the officials must check the measurement after the height has been cleared.

NOTE: Judges shall ensure, before commencing the competition, that the underside and front of the cross-bar are distinguishable, and that the bar is always replaced in a similar manner.

(6) (a) The height shall be recorded to the nearest 1cm below the height measured if that distance is not a whole centimetre.

(b) Unless there is only one competitor remaining the bar shall not be raised by less than 2cm in the High Jump or 5cm in the Pole Vault after each round and the increments by which the bar is raised after each round should never increase.

(7) **Ties**

Ties shall be decided as follows:

(a) The competitor with the lowest number of jumps/vaults at the height *at which the tie occurs* shall be awarded the higher place.

(b) If the tie still remains, the competitor with the lowest total of failures throughout the competition up to and including the height last cleared shall be awarded the higher place.

Example: High Jump

	1.67m	1.72m	1.75m	1.78m	1.80m	1.82m	1.84m	Total Failures	Position
Jones	—	xo	o	xo	—	xxo	All	4	2=
Smith	o	o	o	x—	xo	xxo	failed	4	2=
Brown	o	o	x—	o	xxo	xxo	three	5	4
Black	o	—	—	xxo	xxo	xo	times	5	1

Jones, Smith, Brown and Black all cleared 1.82m and failed at 1.84m
0 = cleared x = failed — = did not jump

(c) if the tie still remains:

(i) if it concerns first place, the competitors tying shall have one more jump/vault at the lowest height at which any of those involved in the tie lost their right to continue jumping/vaulting and, if no decision is reached, the bar shall be raised if the tying athletes were successful or lowered if not, 2cm for the High Jump and 5cm for the Pole Vault. They shall then attempt one jump/vault at each height until one competitor clears a height and the remaining competitor(s) fail at the same height. Competitors so tying must jump/vault on each occasion when resolving the tie.

(ii) if it concerns any other place, the competitors shall be awarded the same place in the competition.

Example:

	1.75m	1.80m	1.83m	1.86m	1.88m	Total Failures	Jump off 1.86m	Jump off 1.84m	Jump off 1.86m	Position
Green	o	xo	xo	xxx		2	x	o	x	2
Johnson	—	xo	xo	—	xxx	2	x	o	o	1
Baker	—	xxo	xo	xxx		3				3

o = cleared x = failed — = did not jump

NOTE: All competitors shall be credited with the best of all their jumps/vaults, including those taken in a jump-off of a first place tie.

RULE 122 HIGH JUMP

(1) Rules 120 and 121 apply.

(2) The uprights or posts shall not be moved during the competition unless the Referee considers the take-off or landing area has become unsuitable. Such a change shall be made only after a round has been completed.

(3) Competitors may place no more than two marks to assist them in their run-ups and take-off. Where the competition takes place on a synthetic surface, chalk or similar substances which leave indelible marks must not be used.

(4) The distance of the run-up is unlimited.

(5) It shall be recorded as a failure if:-

(a) a competitor takes off from both feet; or
(b) after the jump the bar does not remain on the pegs because of the action of the competitor whilst jumping; or
(c) the competitor touches the ground, including the landing area, beyond the plane of the nearer edge of the uprights either between or outside the uprights with any part of the body, without first clearing the bar. However, if when jumping, a competitor touches the landing area with a foot and in the opinion of the Judge no advantage is gained, the attempt shall not, for that reason, be considered a failure.

NOTE: To assist the implementation of this Rule a white line 50mm wide should be drawn (usually by adhesive tape or similar material) between points 3m outside of each upright, the nearer edge of the line being drawn along the plane of the nearer edge of the uprights.

RULE 123 HIGH JUMP SPECIFICATIONS

(1) Any style or kind of uprights or posts may be used provided they are rigid. Uprights should be sufficiently tall so as to exceed the respective height to which the cross-bar is raised by a least 10cm.

(2) The distance between the uprights should not be less than 4.0m or more than 4.04m.

(3) The cross-bar shall be of fibre glass or other suitable material.

(a) It shall be of uniform thickness and shall be circular in cross section except for the end pieces. The diameter of the circular part of the cross-bar shall be at least 29mm but not more than 31mm.
(b) The front of the cross-bar should be painted. The length of the cross-bar should be not less than 3.98m and not more than 4.02m.
(c) The maximum weight of the cross-bar shall be 2kg.
(d) The end pieces shall be each 30-35mm wide and 15-20cm long for the purpose of resting on the supports of the uprights.

(e) These end pieces shall be circular, or semi circular with one clearly defined flat surface on which the bar rests on the cross-bar supports. This flat surface may not be higher than the centre of the vertical cross section of the cross-bar. They shall be hard and smooth. They may not be covered by any material which has the effect of increasing the friction between them and the supports.

(4) Each peg supporting the cross-bar shall be flat and rectangular, 4cm wide and extending 6cm from the uprights *in the direction of the opposite upright.* The supports must be firmly fixed to the uprights and be without any kind of spring. The supports may not be covered with rubber or with any other material which has the effect of increasing the friction between the surface of the cross-bar and the supports. The ends of the cross-bar shall rest on the pegs in such a manner that it easily falls to the ground, either forwards or backwards, if touched by the competitor.

There shall be a space of at least 1cm between the ends of the cross-bar and the uprights.

(5) the ground round the take-off should be level but a maximum inclination of 1:250 in the direction of the centre of the cross-bar is permitted in the case of a synthetic take-off area.

(6) The minimum length of the runway shall be 15m but 25m is desirable if conditions permit.

(7) The landing area should measure at least 5m long (that is at the take-off side) by 3m wide. The minimum depth of the landing area shall be 60cm.

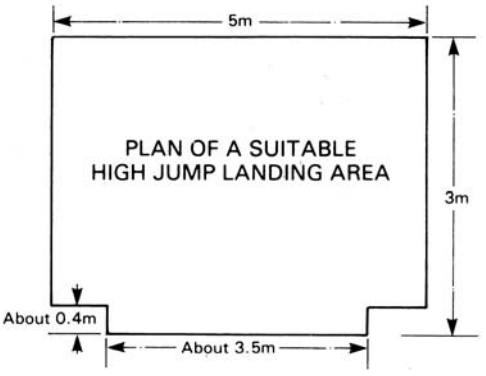

NOTE: The uprights and landing areas shall be so designed that there is a clearance of at least 10cm between them when in use to avoid displacement of the cross-bar through movement of the landing area causing contact with the uprights.

RULE 124 POLE VAULT

(1) Rules 120 and 121 apply.

(2) No marks may be placed on the runways, but a competitor may place marks alongside the runway.

(3) The distance of the run-up is unlimited.

(4) Competitors may have the cross-bar moved in the direction of the landing area so that the edge of the cross-bar nearest the athlete can be positioned at any point from that directly above the inside back of the box to a point 80cms in the direction of the landing area.

NOTE: A white line 1cm wide may be drawn at right angles to the axis of the runway at the level of the inside edge of the top of the box. This line should be prolonged as far as the outside edge of the uprights.

(5) The take-off for the pole vault shall be from a wooden or metal box. Competitors are permitted to place sand in the box when it is their turn to vault.

(6) It shall be recorded as a failure if:-

(a) after the vault the bar does not remain on the pegs because of the action of the competitor whilst vaulting; or
(b) the competitor touches the ground, including the landing area beyond the vertical plane of the upper part of the box, with any part of the body or with the pole, without first clearing the bar; or
(c) the competitor, at the moment of making a vault, or after leaving the ground, places the lower hand above the upper one, or moves the upper hand higher up on the pole; or
(d) during the vault the competitor steadies or replaces the bar with a hand(s).

NOTE: It is not a foul if the competitor runs outside the white lines marking the runway at any point.

(7) No one should touch the pole unless it is falling away from the bar or uprights; if it is so touched and the Referee or Judge is of the opinion it would have dislodged the bar so that it fell from the pegs the vault shall be recorded as a failure.

(8) Competitors may use their own poles. No competitor shall use another's pole except with the consent of the owner.

(9) The pole may be of any material or combination of materials and any length or diameter, but the basic surface must be smooth. At the grip and at the bottom end, the pole may have protective layers of tape.

(10) The use of tape on the hands or fingers shall not be allowed except in the case of need to cover an open cut. The use of a forearm cover to prevent injury shall be allowed. Competitors are permitted to use an adhesive substance on their hands or on the pole, in order to obtain a better grip.

(11) If in making an attempt the competitor's pole is broken it shall not be counted as a failure and the vaulter shall be awarded a new trial.

RULE 125 POLE VAULT SPECIFICATIONS

(1) Any style or kind of uprights or posts may be used provided they are rigid. Where necessary, an adaptor, which is rigidly fixed and allows the bar to be set to heights below the normal limits of that upright or post, may be used.

(2) The distance between the uprights, or between extension arms where such are used, should be not less than 4.30m or more than 4.37m wide.

(3) The cross-bar shall be made of fibre glass or othe suitable material.

(a) It shall be of uniform thickness and shall be circular in cross section except for the end pieces. The diameter of the circular part of the cross-bar shall be at least 29mm but not more than 31mm.
(b) The front of the cross-bar should be painted. The length of the cross-bar should be not less than 4.48m and not more than 4.52m.
(c) The maximum weight of the cross-bar shall be 2.25kg.
(d) The end pieces shall be each 30-35mm wide and 15-20cm long for the purpose of resting on the supports of the uprights.
(e) These end pieces shall be circular, or semi circular with one clearly defined flat surface on which the bar rests on the cross-bar supports. This flat surface may not be higher than the centre of the vertical cross section of the cross-bar. They shall be hard and smooth. They may not be covered by any material which has the effect of increasing the friction between them and the supports.

(4) The pegs supporting the cross-bar shall extend horizontally not more than 5.5cm from the face of the uprights *on the side further from the runway* and must be without notches or indentations of any kind. The pegs must be of uniform thickness throughout and not more than 13mm in diameter. The pegs may not be covered with any material which has the effect of increasing the friction with the ends of the bar.

(5) As an alternative to (4) above, the pegs supporting the cross-bar may be placed upon extension arms permanently fixed to the uprights thus allowing the uprights to be placed wider apart without increasing the length of the cross-bar.

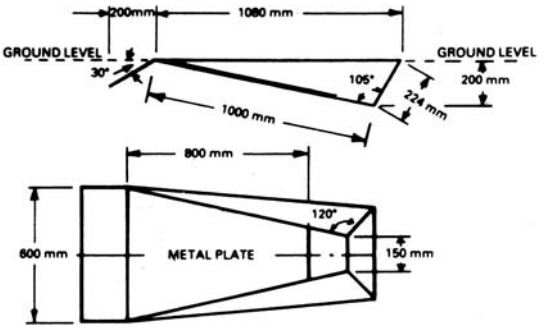

(6) The box in which to plant the pole may be of wood or metal sunk level with the runway and shall be 1 metre in length, measured along the inside of the bottom of the box, 60cm in width at the front end tapering to 15cm in width at the bottom of the stopboard, where it shall be 20cm in depth. The box should be constructed in such a manner that the sides slope outwards and end next to the stopboard at an angle of approximately 120 degrees to the base. If the box is constructed of wood, the bottom shall be lined with 2.5mm sheet metal for a distance of 80cm from the front of the box.

(7) The length of the runway is unlimited. The runway should be level and its minimum length shall be 40m but 45m is desirable if conditions permit. For record purposes the maximum allowance for lateral inclination of the runway must not exceed 1:100 and in the running direction 1:1000 downwards. The minimum width of the runway shall be 1.22m and the maximum shall be 1.25m.

(8) The landing area shall measure not less than 5m × 5m, excluding the two protection pads on either side of the box. The sides of the landing area nearest the box shall be placed 10cm to 15cm from the box and shall slope away from the box at an angle of approximately 45 degrees. (See diagram below). The protective extension pads to the landing bed should be at least 2 metres in length.

The entire landing area shall be covered by a wear sheet, approximately 50cm deep. The minimum depth of the landing area shall be 80cm.

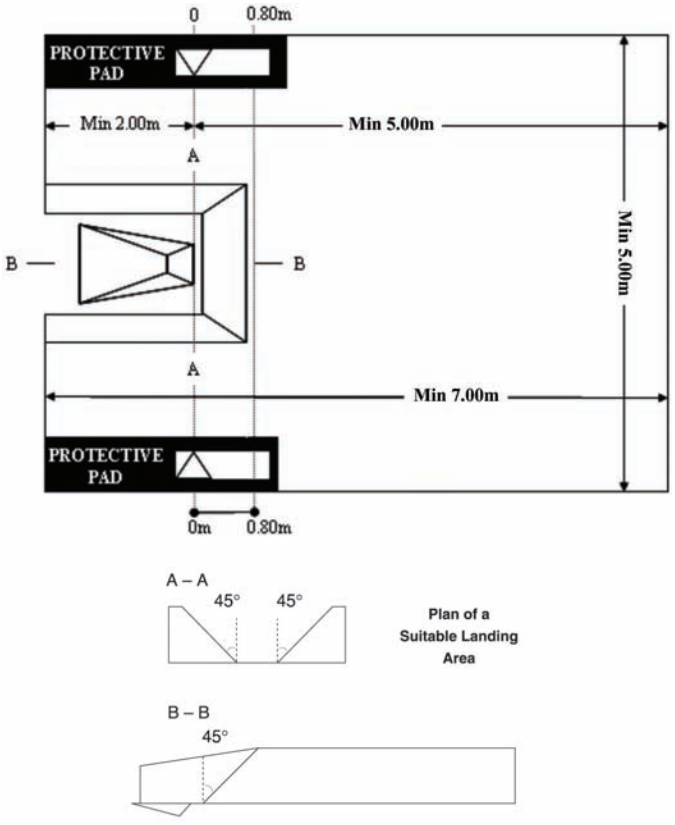

Pole Vault landing area (top and side views)

NOTE: The contours of the bed around the edges of the box should allow for the bending of the lower part of the pole in the direction of the bed. This can be achieved if the bed maintains the angles produced by the box i.e. 105° between the base and the front edge of the box, and 120° between the base and the sides of the box.

HORIZONTAL JUMPS

(LONG JUMP AND TRIPLE JUMP)

RULE 126 GENERAL CONDITIONS

(1) The competition may be decided in either of the following ways:

(a) Each competitor being allowed from three to six trials; or

(b) Each competitor being allowed three trials and the three to eight best being allowed three more trials (see Rule 120(9)). In the event of a tie for the final place(s), any competitor so tying shall be allowed the three additional trials.
(Tying means, in this connection, achieving the same distance and Rule 126(3) should not, therefore, be applied.)
To qualify for these further trials the athlete must have achieved a valid performance. The competition conditions must be explained to the competitors before the event begins.

(2) Competitors shall be credited with the best of all their trials, including jumps taken in resolving a first place tie.

(3) In the case of a tie, the second best performance of the competitors tying shall determine the result. If the tie remains, the third best jump will be decisive and so on. If the tie still remains and it concerns first place, the competitors so tying shall have such additional extra trials as are required to resolve the tie. If the tie concerns any other place, the competitors shall be awarded the same place in the competition.

(4) The take-off shall be from a board the edge of which nearer to the landing area shall be called the 'take-off line'. If a competitor takes off before reaching the board, it shall not for that reason be counted as a failure.

(5) The minimum length of the runway should be at least 40 metres measured from the end of the runway to the relevant take-off line.

(6) No marks shall be placed on the runway, but a competitor may place marks alongside the runway. No competitor may place, or cause to be placed, any mark beyond the 'take-off line'.

(7) It shall be counted as a failure if any competitor:

(a) while taking off touches the ground beyond the take-off line or take-off line extended with any part of the body, whether running up without jumping or in the act of jumping.

(b) takes off from outside either end of the board, whether beyond or behind the take-off line extended.

(c) in the course of landing, touches the ground outside the landing area nearer to the take-off line than the break in the sand to which the measurement of the jump would have been made.
(d) before leaving the landing area after a completed jump, walks back through the landing area.
(e) employs any form of somersaulting whilst running up or in the act of jumping.

NOTE 1: It is not a foul if the competitor runs outside the white lines marking the runway at any point.

NOTE 2:It is not a failure if in the course of landing, an athlete touches with any part of the body, the ground outside the landing area, unless such contact is the first contact or contravenes paragraph 1 (c) above.

NOTE 3: It is not a failure if an athlete walks back through the landing area after having previously left the landing area in a correct way.

(8) The measurement of the jump shall be made at right angles from the nearest break in the sand in the landing area made by any part of the body of the competitor to the take-off line. Only valid trials shall be measured.

(9) The distance shall be recorded to the nearest 1cm below the distance measured if that distance is not a whole centimetre.

(10) If calibrated measuring equipment is used its accuracy must be checked with a steel tape; otherwise a steel or fibre glass tape should be used and the part of the tape showing the distance jumped must be held at the take-off line. Alternatively a scientific apparatus, which has a certificate of accuracy from a nationally recognised standardising organisation may be used.

(11) Whenever possible wind velocity should be measured and recorded.

(a) The gauge should be set up at 20m from the take-off line, not more than 2m from, and parallel to the edge of the runway and at a height of approximately 1.22m. Where a tubular wind gauge is used the length on either side of the measuring device should be at least twice the diameter of the tube.
(b) The velocity shall be measured for a period of 5 seconds from the time a competitor passes a mark placed 40m (Long Jump) or 35m (Triple Jump) from the take-off line. If a competitor runs less than 40m or 35m as the case may be, the reading shall be taken from the time the athlete commences the run.
(c) The wind gauge shall be read in metres per second, rounded to the next higher tenth of a metre per second in the positive direction. (For example, a reading of +2.03m/sec. shall be recorded as +2.1m/sec; a reading of −2.03m/sec. shall be recorded as −2.0m/sec.). (See also Rule 141 (14) and (19).

RULE 127 GENERAL SPECIFICATIONS

(1) A take-off board shall be rigidly fixed in the ground, flush therewith. It shall be made of wood 1.21-1.23m long, 19.8-20.2cm wide and maximum 10cm deep, and painted white.

(2) The runway should be level and at least 40m in length.

(3) The minimum width of the runway shall be 1.22m and the maximum shall be 1.25m.

(4) For record purposes the maximum allowance for lateral inclination of the runway must not exceed 1:100 and in the running direction 1:1000 downwards.

(5) In order that jumps can be measured accurately the sand in the landing area should be moistened before the competition.

(6) The surface of the sand in the landing area should be level with the top of the take-off board.

(7) Immediately beyond the take-off line there shall be placed a rigid board of plasticine or other suitable material for recording the athlete's footprint in the case of a foot fault. The specifications for the plasticine indicator board are as follows:

(a) the board shall be rigid, 98-102mm wide and 1.21-1.22m long. At least the 10mm closest to the take-off board shall be covered with plasticine or other suitable material on the top surface.
(b) the surface shall rise from the level of the take-off board at an angle of 45° in the direction of running to a maximum height above the take-off board of 7mm.
(c) The board shall be mounted in a recess or shelf in the runway, on the side of the take-off board nearer the landing area. When mounted in this recess, the whole assembly must be sufficiently rigid to accept the full force of the athlete's foot.
(d) The edges shall either slant at an angle of 45° with the edge nearer to the runway covered with a plasticine layer along its length 1mm thick (see Diagram 1) or shall be cut away such that the recess, when filled with plasticine shall slant at an angle of 45°. (see Diagram 2).
(e) The surface of the board beneath the plasticine shall be of a material in which the spikes of an athlete's shoe will grip and not skid.
(f) The upper part of the indicator board shall also be covered for the first 10mm approximately and along its entire length by a plasticine layer.

NOTE: The layer of plasticine can be smoothed off by means of a roller or suitably shaped scraper for the purposes of removing the footprints of the competitors.

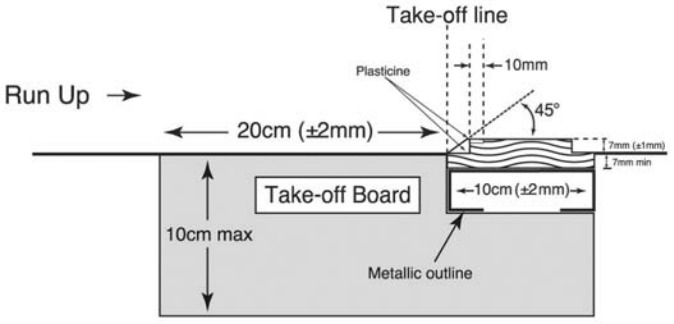

Take-off board and plasticine indicator board

Diagram 1 – Take-off Board and Plasticine Indicator Board

(8) If it is not possible to install an indicator board as identified in (7) soft earth or damp sand should be sprinkled to a height of 7mm above the level of the take-off board over a width of 10cm beyond the edge of the take-off line. At the take-off line the sand or earth should be raised at an angle of 45° to the height of 7mm.

(9) The landing area should have a minimum width of 2.75m, a maximum width of 3m, and be at least 9m long. It should, if possible, be so placed that the middle of the runway, if extended, would coincide with the middle of the landing area.

NOTE: When the axis of the runway is not in line with the centre of the landing area this shall be achieved by placing a tape which shall delimit a landing area which has the same width on either side of the central axis of the runway prolonged.

Centralised Long Jump/Triple Jump Landing Area

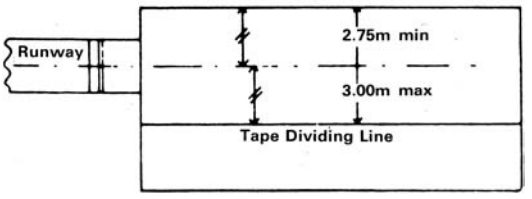

RULE 128 LONG JUMP

(1) Rules 120, 126 and 127 apply.

(2) A space of at least 1m but no more than 3m, of a similar surface to the runway, should be left between the take-off board and the landing area.

(3) The distance between the take-off board and the end of the landing area should be at least 10m.

RULE 129 TRIPLE JUMP

(1) Rules 120, 126 and 127 apply.

NOTE: Rule 126(7)(c) does not apply to the normal landings from the hop and step phases.

(2) The hop shall be made so that competitors shall first land upon the same foot with which they shall have taken off, in the step they shall land on the other foot, from which subsequently the jump is performed. It shall not be considered a failure if competitors, during the step phase, touch the ground with the "sleeping" leg.

(3) The ground between the take-off board and the landing area must be level.

(4) The distance between the take-off boards and the leading edge of the landing area should normally be 13m, 11m, 9m and 7m. Where such a board has not been set into the runway and is required a white area of similar dimensions to those in Rule 127(1) should be drawn. It must be appreciated that suitable distances will vary according to the standard of the competition.

(5) Under 13 athletes are not permitted to compete in Triple Jump events.

THROWING EVENTS

RULE 130 GENERAL CONDITIONS

(1) The competition may be decided in either of the following ways:

(a) Each competitor being allowed from three to six trials; or

(b) Each competitor being allowed three trials and the three to eight best competitors being allowed three more trials. (See Rule 120(9)). In the event of a tie for the final place(s), any competitor so tying shall be allowed the three additional trials.
(Tying means in this connection achieving the same distance and Rule 130(3) should not, therefore, be applied.).
To qualify for these further trials the athlete must have achieved a valid performance.
The competition conditions must be explained to the competitors before the event begins.

(2) Competitors shall be credited with the best of all their trials, including throws taken in resolving a first place tie. Only valid trials shall be measured.

(3) In the case of a tie, the second best performance of the competitors tying shall determine the result. If the tie remains, the third best throw will be decisive and so on. If the tie remains and it concerns first place, the competitors so tying shall have such additional extra trials as are required to resolve the tie. If the tie concerns any other place, the competitors shall be awarded the same place in the competition.

(4) No competitor may place, or cause to be placed, any mark within the throwing sector.

(5) Competitors may use any implements provided for general use. Subject to any regulations laid down by the Promoting Body, competitors who wish to use their own implements must submit them to the Referee for approval. An athlete shall not use another's implement without the owner's prior permission.

(6) No device of any kind (e.g. the taping of the fingers) which in any way assists a competitor when making a throw shall be allowed, except in throwing the Hammer where the taping of individual fingers is permitted.

NOTE: The use of tape to cover injuries to the hand will be allowed only if the Referee is satisfied on medical or other evidence that the tape is necessary. The use of tape on the wrist will be allowed.

(7) In order to obtain a better grip, competitors are permitted to use an adhesive substance on their hands only except in the Hammer. (See Rule 133(7))

(8) In order to protect the spine from injury a competitor may wear a belt of leather or some other suitable material.

(9) When markers are used to indicate the best throw of each competitor and to show record distances they shall be placed on a line or tape outside the sector lines.

(10) The throw shall be recorded to the nearest 1cm below the distance measured if that distance is not a whole centimetre.

Measuring Sectors for Throwing Events from a Circle

NOTE: The outer ends of the sector lines should be marked with flags.

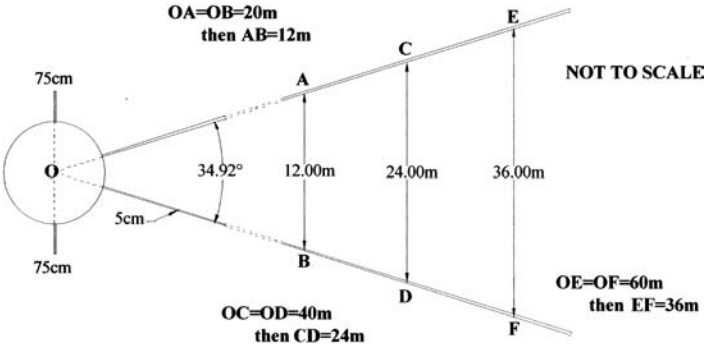

NOTE: The landing sector shall be marked with white lines 5cm wide at an angle of 34.92° such that the inner edge of lines, if extended, would pass through the centre of the circle.

The 34.92° sector may be laid out accurately by making the distance between two points on the sector lines 20m from the centre of the circle 12m apart. Thus for every 1m from the centre of the circle, the distance across should be 60cm.

RULE 131 PUTTING THE SHOT

(1) Rules 120 and 130 apply.

(2) IN ORDER TO AVOID ACCIDENTS THE CENTRAL THROWING AREA MUST BE ROPED OFF AS A UNIT AT A HEIGHT OF APPROXIMATELY 1 METRE.
ALTERNATIVELY, SHOT THROWING SECTORS MUST BE ROPED OFF AT A HEIGHT OF APPROXIMATELY 1 METRE AND AT A MINIMUM DISTANCE OF 2 METRES OUTSIDE THE SHOT SECTOR LINES.

(3) Competitors must be given instructions that implements must be thrown during practice only from the circle. Implements must be returned *by hand* during practice or competition and must not be thrown back to the starting

area. The Referee or other appropriate official shall disqualify from competing in the event any athletes who wilfully disobey the above instructions after having their attention drawn to them.

(4) No practice trials shall be allowed after a competition has begun.

(5) Gloves may not be worn. In order to protect the wrist from injury, a competitor may wear a bandage at the wrist.

(6) Competitors must not spray or spread any substance on the surface of a throwing circle nor on their shoes or roughen the surface of the circle.

(7) Competitors must commence the throw from a stationary position within the circle; they may adopt any position they choose.

(8) It shall be a foul throw if the competitor, after stepping into the circle and starting to make the throw, touches with any part of the body, the ground outside the circle, the top of the stop-board or the top of the circle rim. A competitor is allowed to touch the inside of the iron band or stop-board.

(9) The competitor must not leave the circle until the shot has touched the ground. When leaving the circle the first contact with the top of the circle rim or the ground outside the circle must be completely behind the white line which is drawn outside the circle, the rear edge of which runs theoretically through the centre of the circle.

(10) Provided that in the course of a trial the foregoing Rules have not been infringed, a competitor may interrupt a trial once started, may lay the implement down, may leave the circle, before returning to a stationary position and beginning a fresh start.

NOTE: When leaving the circle the competitor must step out as required in (9). All the moves permitted by this paragraph shall be included in the maximum time normally allowed for a trial as given in Rule 120 (5).

(11) The shot shall be put from the shoulder with one hand only. At the time the competitor takes a stance in the ring to commence a put, the shot shall touch or be in close contact with the neck or chin and the hand shall not be dropped below this position during the act of putting. The shot must not be brought behind the line of the shoulders.

(12) In making a put the competitors may rest their feet against but not on top of the stop-board.

(13) A foul throw or letting go of the shot in an attempt shall be reckoned as a trial.

(14) For a valid put the shot must fall completely within the inner edges of the lines marking the sector set out on the ground so that the radii cross at the centre of the circle. (See diagram and Note below Rule 130(10)).

(15) All measurements must be made from the nearest edge of the first mark made in the ground by the shot to the inner edge of the circle rim along a line drawn from the mark to the centre of the circle.

(16) All measurements should be made immediately after each put. A steel or fibre glass tape should be used for measurement, and that part of the tape showing the distance put must be held by the official at the circle. Alternatively, approved datum measurement equipment may be used, as may a scientific apparatus which has a certificate of accuracy from a nationally recognised standardising organisation.

(17) The throw shall be recorded to the nearest 1cm below the distance measured if that distance is not a whole centimetre.

RULE 132 PUTTING THE SHOT SPECIFICATIONS

(1) The circle shall be measured from the inside. The surface should be of concrete, asphalt or some other firm but not slippery material. The surface should be lightly stippled when being laid to give a rough but not ribbed surface.

(2) The surface of the inside of the circle should be level and 20mm ± 6mm lower than the upper edge of the ring which should be level with the ground outside.

(3) Circle Rings:

Construction— The rim shall be made of band iron, steel, or other suitable material and be painted white.

Measurements— (Metal)—The inside diameter of the circle shall measure 2.135m maximum, and the rim of the circle shall be at least 6mm thick.

(Wood)—The inside diameter of the circle shall measure 2.135m maximum, and the rim of the circle shall be 7.5mm thick. A tolerance of ±5mm is permitted for the inside diameter of a circle.

(4) A white line 5cm wide shall be drawn from the top of the circle, extending for at least 75cm on either side of the circle, the theoretical extension of this line across the circle dividing it into front and rear halves with the rear edge passing through the centre of the circle.

(5) A portable circle meeting with the specifications above is permissible.

(6) A curved stop-board painted white, 1.21-1.23m long on the inside, 11.2-11.4cm wide and 9.8-10.2cm high in relation to the level of the inside of the circle shall be fixed in the middle of the circumference of the front half of the circle. The board shall curve so that the inside edge coincides with the inner edge of the circle and shall be fixed firmly to the ground.

PLAN VIEW OF ALTERNATIVE STOPBOARDS

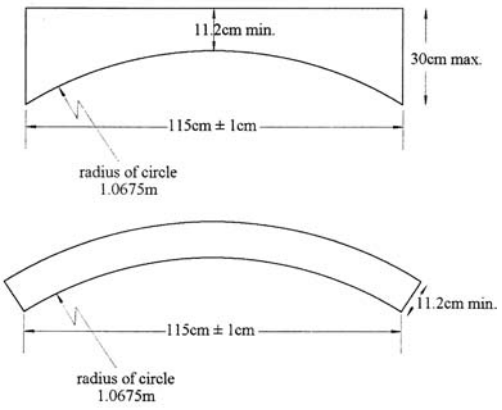

CROSS SECTION OF STOPBOARD

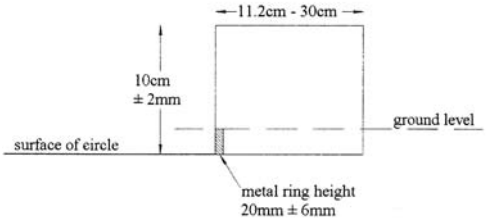

(7) The shot shall be of solid iron, brass or any metal not softer than brass, or a shell of such metal filled with lead or some other material.

(8) The shot shall be spherical in shape, its surface shall have no roughness and the finish shall be smooth. It shall conform to the following specifications:

MEN	SENIOR		JUNIORS	
	Minimum	Maximum	Minimum	Maximum
Weight	7.26kg		6kg	
Diameter	110mm	130mm	105mm	125mm
	UNDER 17			
Weight	5kg			
Diameter	100mm	120mm		
	UNDER 13		UNDER 15	
Weight	3.25kg		4kg	
Diameter	90mm	105mm	95mm	110mm
WOMEN	SENIORS AND JUNIORS		UNDER 17	
	Minimum	Maximum	Minimum	Maximum
Weight	4kg		4kg	
Diameter	95mm	110mm	95mm	110mm
	UNDER 15		UNDER 13	
Weight	3.25kg		2.72kg	
Diameter	90mm	105mm	85mm	95mm
MASTERS	MEN 40-49		MEN 50-59	
	Minimum	Maximum	Minimum	Maximum
Weight	7.26kg		6kg	
Diameter	110mm	130mm	105mm	125mm
	MEN 60-69		MEN 70 AND OVER	
Weight	5kg		4kg	
Diameter	100mm	120mm	95mm	110mm
	WOMEN 35-49		WOMEN 50 AND OVER	
Weight	4kg		3kg	
Diameter	95mm	110mm	85mm	110mm

NOTE: Weight indicated is the minimum for admission to the competition and for acceptance of records.
Manufacturers are recommended to supply equipment for competition which exceeds the specified weights by at least 5gr.

In these Rules 'smooth' implies a normal cast or turned surface which may or may not have been coated with a fine powder, sand blasted, sprayed or painted—such surfaces are 'orthodox'. Any surface which has been roughened by ribbing, grooving, knurling etc., is not 'smooth'. No unorthodox surface is permitted.

RULE 133 THROWING THE HAMMER

(1) Rules 120 and 130 apply.

(2) IN ORDER TO AVOID ACCIDENTS THE CENTRAL THROWING AREA MUST BE ROPED OFF AS A UNIT AT A HEIGHT OF APPROXIMATELY 1 METRE.
ALTERNATIVELY, HAMMER THROWING SECTORS MUST BE ROPED OFF AT A HEIGHT OF APPROXIMATELY 1 METRE AND TO MAKE A 60° SECTOR INSIDE WHICH THE HAMMER SECTOR IS CENTRALLY PLACED.

For safety reasons all throws should be preceded by a warning which should be acknowledged by the event officials before the throw commences.

NOTE: Referees are reminded of the need to ensure that discus, hammer and javelin competitions (including warm-up for these events) are not held at the same time within the central throwing area when the standard of any of the competitors is likely to create possible danger to the officials operating within and alongside the respective sectors of these events.

(3) Competitors must be given instructions that implements must be thrown during practice only from the circle. Implements must be returned *by hand* during practice or competition and must not be thrown back to the starting area. The Referee or other appropriate official shall disqualify from competing in the event any athlete who wilfully disobeys the above instructions after having his/her attention drawn to them.

(4) No practice trials shall be allowed after a competition has begun.

(5) All throws shall be made from a cage. (See Rule 137).

(6) Gloves may be worn. The gloves must be smooth on back and front, and the tip of the fingers, other than the thumb, must be exposed.

(7) Competitors must not spray or spread any substance on the surface of a throwing circle nor on their shoes or roughen the surface of the circle. In order to obtain a better grip competitors are permitted to use a suitable substance on their hands or gloves only.

(8) Competitors must commence the throw from a stationary position within the circle; they may adopt any position they choose.

(9) It shall be a foul throw if the competitor, after stepping into the circle and starting to make the throw, touches with any part of the body the ground outside the circle, or the top of the circle rim. A competitor is allowed to touch the inside of the iron band.

(10) The competitor must not leave the circle until the hammer has touched the ground. When leaving the circle the first contact with the top of the circle rim or the ground outside the circle must be completely behind the white line which is drawn outside the circle, the rear edge of which runs theoretically through the centre of the circle.

(11) The competitor in the starting position prior to the preliminary swings or turns is allowed to put the head of the hammer on the ground inside or outside the circle.

(12) It shall not be considered a foul throw if the head of the hammer touches the groud, or the top of the iron band, when the competitor makes the preliminary swings or turns.

(13) Provided that in the course of the trial the foregoing Rules have not been infringed, a competitor may interrupt a trial once started, may lay the hammer down, may leave the circle before returning to a stationary position and beginning a fresh trial.

NOTE: When leaving the circle the competitor must step out as required in (10) above. All the moves permitted by this paragraph shall be included in the maximum time normally allowed for a trial as given in Rule 120(5).

(14) If the hammer breaks during a throw or while in the air, it shall not be counted as a throw, provided it was made in accordance with the Rules. If a competitor thereby loses balance and contravenes any part of this Rule, it shall not be counted as a foul throw and the athlete shall be awarded a new trial.

(15) A foul throw or letting go of the hammer in an attempt shall be reckoned as a trial.

(16) For a valid throw the hammer head must fall completely within the inner edges of the lines marking the sector set out on the ground so that the radii cross at the centre of the circle. (See diagram and Note below Rule 130(10)) The outer ends of the sector should be marked with flags.

NOTE: If a hammer first hits the cage and then lands within the sector, the throw shall not, for that reason, be considered invalid.

(17) All measurements must be made from the nearest edge of the mark first made in the ground by the head of the hammer to the inner edge of the circle along a line drawn from the mark to the centre of the circle.

(18) A steel or fibre glass tape should be used for measurement, and that part of the tape showing the distance thrown must be held by the official at the circle. Alternatively, approved datum measurement equipment may be used, as may a scientific apparatus which has obtained a certificate of accuracy from a nationally recognised standardising organisation.

(19) The throw shall be recorded to the nearest 1cm below the distance measured if that distance is not a whole centimetre.

RULE 134 THROWING THE HAMMER SPECIFICATIONS

(1) The circle shall be measured from the inside. The surface should be of concrete, asphalt or some other firm but not slippery material. The surface should be lightly stippled when being laid to give a rough but not ribbed surface. The surface of the inside of the circle should be level and 20mm ± 6mm lower than the upper edge of the ring which should be level with the ground outside.

(2) Circle Rings

Construction— The rim shall be made of band iron, steel, or other suitable material and be painted white.

Measurements— (Metal)—The inside diameter of the circle shall measure 2.135m maximum, and the rim of the circle shall be at least 6mm thick.

(Wood)—The inside diameter of the circle shall measure 2.135m maximum, and the rim of the circle shall be 7.5mm thick.

A tolerance of ±5mm is permitted for the inside diameter of the circle.

(3) A white line 5cm wide shall be drawn from the top of the circle, extending for at least 75cm on either side of the circle, the theoretical extension of this line across the circle dividing it into front and rear halves with the rear edge passing through the centre of the circle.

(4) A portable circle meeting with these specifications is permissible.

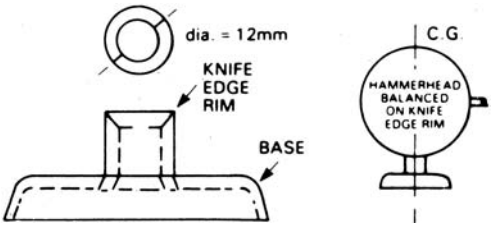

(5) The Hammer:

(i) Head—The head shall be of solid iron, brass or any metal not softer than brass or a shell of such metal filled with lead or other solid material. It must be spherical in shape. If a filling is used this must be inserted in such a manner that it is immovable and that the centre of gravity shall not be more than 6mm from the centre of the sphere.

NOTE: It must be possible to balance the head, less wire and handle on a horizontal, sharp edged, circular orifice 12mm in diameter. (see diagram).

(ii) Wire—The wire shall be a single unbroken and straight length of spring wire not less than 3mm or No.11 Standard Wire Gauge in diameter, or a 4mm diameter 6-stranded wire, the loops of which are prefixed under pressure with a crimping brush, and either shall be such that it cannot stretch appreciably when thrown. The wire may be looped at one or both ends, as a means of attachment.

A SUITABLE DOUBLE LOOP HANDLE

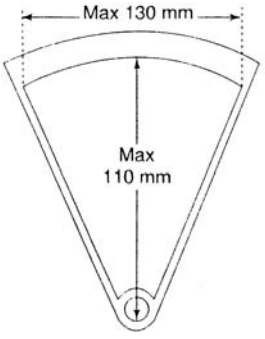

ALTERNATIVE GRIP

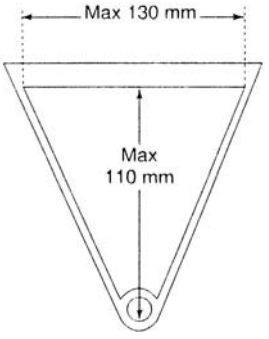

(iii) The Handle—The handle may be either of single or double loop construction, but must be rigid and without hinging joints of any kind and so made that it cannot stretch appreciably while being thrown. It must be attached to the wire in such a manner that it cannot turn within the loop of the wire to increase the overall length of the hammer.
The handle may have a curved or straight grip with a maximum width inside of 130mm and a maximum length inside of 110mm.

(iv) Connections—The wire shall be connected to the head by means of a swivel, which may be either plain or ball-bearing. The handle shall be connected to the wire by means of a loop. A swivel may not be used.

(v) Construction—The hammer shall be so constructed that it cannot elongate appreciably while it is being thrown. It shall conform to the following specifications:

MEN	SENIOR		JUNIOR	
	Minimum	Maximum	Minimum	Maximum
Weight complete	7.26kg		6kg	
Length of hammer	117.5cm	121.5cm	117.5cm	121.5cm
Diameter of head	110mm	130mm	105mm	125mm
	UNDER 17		UNDER 15	
Weight complete	5kg		4kg	
Length of hammer	116.5cm	120.0cm	116.0cm	119.5cm
Diameter of head	100mm	120mm	95mm	110mm
			UNDER 13 BOYS	
Weight complete			3kg	
Length of hammer			105.0cm	110.0cm
Diameter of head			85mm	100mm
WOMEN	SENIORS, JUNIORS and UNDER 17		UNDER 15	
Weight complete	4kg		3kg	
Length of hammer	116.0cm	119.5cm	116.0cm	119.5cm
Diameter of head	95mm	110mm	85mm	100mm
			UNDER 13 GIRLS	
Weight complete			3kg	
Length of hammer			105.0cm	110.0cm
Diameter of head			85mm	100mm
MASTERS	MEN 40-49		MEN 50-59	
Weight complete	7.26kg		6kg	
Length of hammer	117.5cm	121.5cm	117.5cm	121.5cm
Diameter of head	110mm	130mm	105mm	125mm
	MEN 60-69		MEN 70 and OVER	
Weight complete	5kg		4kg	
Length of hammer	116.5cm	120cm	116.0cm	119.5cm
Diameter of head	100mm	120mm	95mm	110mm
	WOMEN 35-49		WOMEN 50 and OVER	
Weight complete	4kg		3kg	
Length of hammer	116.0cm	119.5cm	116.0cm	119.5cm
Diameter of head	95mm	110mm	85mm	100mm

NOTE: The length of the hammer, complete as thrown, must be measured from the inside of the handle. Weight indicated is the minimum for admission to the competition and for acceptance of records.
Manufacturers are recommended to supply equipment for competition which exceeds the specified weights by at least 5gr.

Under 13's. These are to be regarded as development events and are not recommended for inclusion in leagues during 2006 and 2007.

RULE 135 THROWING THE DISCUS

(1) Rules 120 and 130 apply.

(2) IN ORDER TO AVOID ACCIDENTS THE CENTRAL THROWING AREA MUST BE ROPED OFF AS A UNIT AT A HEIGHT OF APPROXIMATELY 1 METRE.
ALTERNATIVELY, DISCUS THROWING SECTORS MUST BE ROPED OFF AT A HEIGHT OF APPROXIMATELY 1 METRE AND TO MAKE A 60° SECTOR INSIDE WHICH THE DISCUS SECTOR IS CENTRALLY PLACED.

For safety reasons all throws should be preceded by a warning which should be acknowledged by the event officials before the throw commences.

NOTE: Referees are reminded of the need to ensure that discus, hammer and javelin competitions (including warm-up for these events) are not held at the same time within the central throwing area when the standard of any of the competitors is likely to create possible danger to the officials operating within and alongside the respective sectors of these events.

(3) Competitors must be given instructions that implements must be thrown during practice only from the circle. Implements must be returned *by hand* during practice or competition and must not be thrown back to the starting area. The Referee or other appropriate official shall disqualify from competing in the event any athletes who wilfully disobey the above instructions after having their attention drawn to them.

(4) No practice trials shall be allowed after a competition has begun.

(5) All throws shall be made from a cage. (see Rule 137).

(6) Gloves may not be worn.

(7) Competitors must not spray or spread any substance on the surface of a throwing circle nor on their shoes or roughen the surface of the circle.

(8) Competitors must commence the throw from a stationary position within the circle; they may adopt any position they choose.

(9) It shall be a foul throw if the competitor, after stepping into the circle and starting to make the throw, touches with any part of the body the ground outside the circle, or the top of the circle rim. A competitor is allowed to touch the inside of the iron band.

(10) The competitor must not leave the circle until the discus has touched the ground. When leaving the circle the first contact with the top of the circle rim or the ground outside the circle must be completely behind the white line which is drawn outside the circle, the rear edge of which runs theoretically through the centre of the circle.

(11) Provided that in the course of a trial the foregoing Rules have not been infringed, a competitor may interrupt a trial once started, may lay down the discus, may leave the circle before returning to a stationary position and beginning a fresh trial.

NOTE: When leaving the circle the competitor must step out as required above. All the moves permitted by this paragraph shall be included in the maximum time normally allowed for a trial as given in Rule 120(5)).

(12) A foul throw or letting go of the discus in an attempt shall be reckoned as a trial. If a discus breaks during a fair throw it shall not be counted as a trial.

(13) For a valid throw the discus must fall completely within the inner edges of the lines marking the sector set out on the ground so that the radii cross at the centre of the circle. (See diagram and Note below Rule 130(10)) The outer ends of the sector should be marked with flags.

NOTE: If a discus first hits the cage and then lands within the sector, the throw shall not, for that reason, be considered invalid.

(14) All measurements must be made from the nearest edge of the mark first made in the ground by the discus to the inner edge of the circle along a line drawn from the mark to the centre of the circle.

(15) A steel or fibre glass tape should be used for measurement, and that part of the tape showing the distance thrown must be held by the official at the circle. Alternatively approved datum measurement equipment may be used, as may a scientific apparatus which has obtained a certificate of accuracy from a nationally recognised standardising organisation.

(16) The throw shall be recorded to the nearest 1cm below the distance measured if that distance is not a whole centimetre.

RULE 136 THROWING THE DISCUS SPECIFICATIONS

(1) The circle shall be measured from the inside. The surface should be of concrete, asphalt, or some other firm but not slippery material. The surface should be lightly stippled when being laid to give a rough but not ribbed surface.

(2) The surface of the inside of the circle should be level and 20mm $\pm$ 6mm lower than the upper edge of the ring which should be level with the ground outside.

(3) Circle rings:

Construction— The rim shall be made of band iron, steel, or other suitable material and be painted white.

Measurements— (Metal)—The inside diameter of the circle shall measure 2.50m maximum, and the rim of the circle shall be at least 6mm thick.

(Wood)—The inside diameter of the circle shall measure 2.50m maximum, and the rim of the circle shall be 7.5mm thick.

A tolerance of $\pm$5mm is permitted for the inside diameter of a circle.

DISCUS

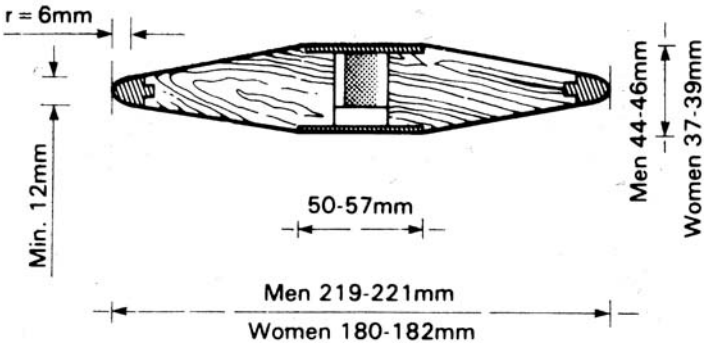

(4) A white line 5cm wide shall be drawn from the top of the circle, extending for at least 75cm on either side of the circle, the theoretical extension of this line across the circle dividing it into front and rear halves with the rear edge passing through the centre of the circle.

(5) A portable circle meeting with the specifications above is permissible.

(6) The body of the discus may be solid or hollow and shall be made of wood, or other suitable material, with a metal rim, the edge of which shall be circular. The discus, including the surface of the rim, shall have no roughness and the finish shall be smooth and uniform throughout. The cross-section of the edge shall be rounded in a true circle having a radius of approximately 6mm. Circular plates set flush into the side of the body and in the exact centre of the discus may be used to secure the weight. Both sides shall be identical and shall have no indentations, projecting points or sharp edges. The sides shall taper in a straight line from the beginning of the curve of the rim to a circle of a radius of 25mm to 28.5mm from the centre of the discus.

(7) A discus can also be made of other materials without metal plates so long as the measurements and the weight correspond to the specifications.

(8) The discus shall conform to the following specifications:

	WEIGHT	OUTER DIA. OF METAL RIM		DIA. OF METAL PLATES		THICKNESS AT CENTRE		THICKNESS OF RIM AT 6mm FROM THE EDGE	
		Min	*Max*	*Min*	*Max*	*Min*	*Max*	*Min*	*Max*
MEN									
SENIORS	2kg	219mm	221mm	50mm	57mm	44mm	46mm	12mm	13mm
JUNIORS	1.75kg	210mm	212mm	50mm	57mm	41mm	43mm	12mm	13mm
UNDER 17	1.5kg	200mm	205mm	50mm	57mm	37mm	42mm	12mm	13mm
UNDER 15	1.25kg	180mm	182mm	50mm	57mm	37mm	39mm	12mm	13mm
UNDER 13	1kg	180mm	182mm	50mm	57mm	37mm	39mm	12mm	13mm
WOMEN (all age groups except Under 13)	1kg	180mm	182mm	50mm	57mm	37mm	39mm	12mm	13mm
UNDER 13	0.75kg	145mm	170mm	50mm	57mm	25mm	35mm	10mm	11mm
MASTERS									
Men 40-49	2kg	219mm	221mm	50mm	57mm	44mm	46mm	12mm	13mm
Men 50-59	1.5kg	200mm	205mm	50mm	57mm	37mm	42mm	12mm	13mm
Men 60 and over	1kg	180mm	182mm	50mm	57mm	37mm	39mm	12mm	13mm
Women 35 and over	1kg	180mm	182mm	50mm	57mm	37mm	39mm	12mm	13mm

NOTES: Weight indicated is the minimum for admission to the competition and for acceptance of records.
Manufacturers are recommended to supply equipment for competition which exceeds the specified weights by at least 5gr.

RULE 137 CAGES FOR HAMMER AND DISCUS

Hammer Throwing Cage

(1) All hammer throws shall be made from an enclosure or cage to ensure the safety of spectators, officals and competitors. Advice is available on request from UK Athletics.

(2) The cage should be designed, manufactured and maintained so as to be capable of stopping a 7.26kg hammer head, 110mm in diameter, moving at a speed of up to 29 metres per second. The uprights for all cages should be erected in sockets concreted permanently into the ground and so designed that an alignment pin points the gallows arm in the right direction. Staying wires should not be used. The arrangement should be such that there is no danger of the implement ricocheting or rebounding back towards the athlete or over the top of the cage. Provided that it satisfies all the requirements of this rule, any form of cage design and construction can be used.

(3) The cage should be U-shaped in plan, consisting of a minimum of 7 panels each having a minimum width of 2.74m as shown in the diagram. The width of the mouth should be 6m, positioned 4.2m in front of the centre of the throwing circle. The end points of the 6m wide mouth shall be the inner edge of the cage netting. The minimum height of the netting panels shall be 7m.

Provision should be made in the design and construction of the cage to prevent a hammer forcing its way through any joints in the cage or the netting. In addition, provision should be made to prevent a hammer sliding along the ground underneath the netting.

(4) Two movable panels shall be provided at the front of the cage, only one of which will be operative at a time. The minimum height of the panels shall be 5.5m. Where possible the minimum height of the movable panels shall be 9m. See (v) below.

NOTES:

(i) These panels are used alternatively, the left hand panel for a right handed thrower and the right hand panel for a left handed thrower. In view of the need to change over from one panel to the other during the competition, when both left and right handed throwers are present, it is essential that this changeover should require little labour and be carried out in the minimum of time.

(ii) The left panel only is shown in the diagram, in position for the cage to be used by a right handed thrower. The end position for the right panel is also shown on the diagram.

(iii) When in operation, the movable panel must be exactly in the position shown in the diagram, i.e. 1.12m from the centre line of the sector. Provision must therefore be made in the design of the movable panels to lock them in the operative position.

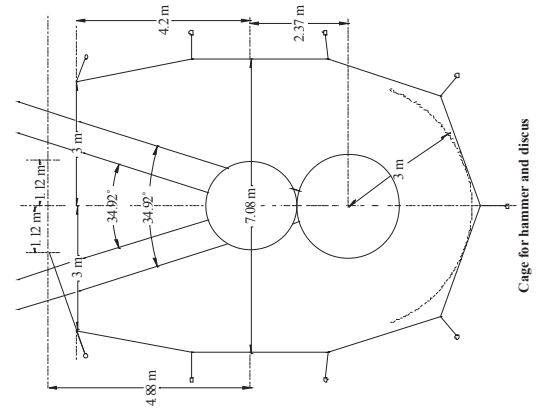

Cage for hammer and discus

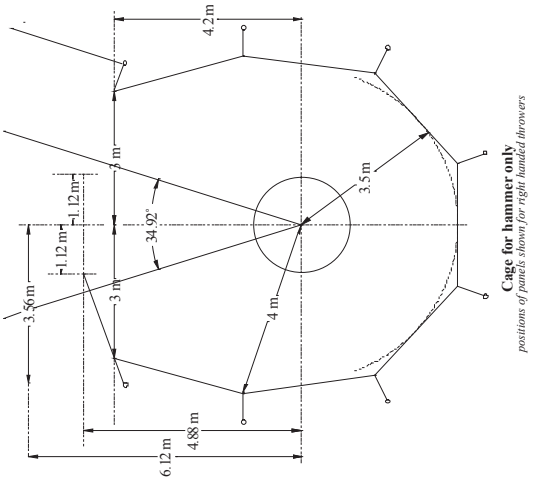

Cage for hammer only
positions of panels shown for right handed throwers

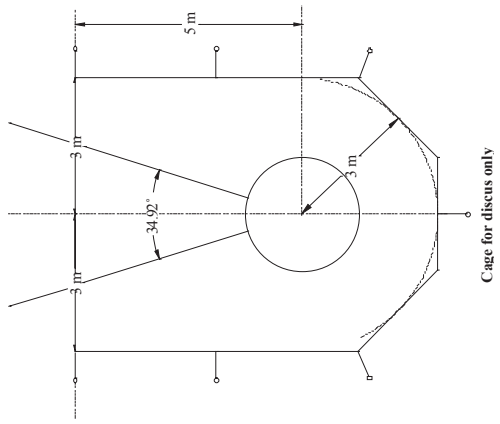

Cage for discus only

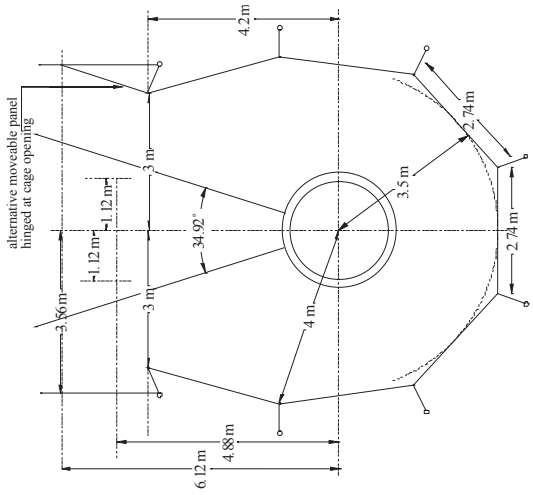

Cage for hammer or discus using concentric circles showing open position of moveable netting panels when used for discus

see diagram at left for positions of panels for hammer

(iv) The construction of these panels and their operation depends on the overall design of the cage and can be by sliding, hinging on a vertical or horizontal axis or dismounting. The only firm requirements are that the panel in operation must be fully able to stop any hammer striking it and there must be no danger of a hammer being able to force its way between the fixed and movable panels.

(v) Where the discus is thrown from a cage with concentric circles, the centre of which is 4.20m behind the 6m opening, the movable netting panels shall be positioned so that they pass through a point which is 6.12m in front of the centre of the circle and 3.56m from the centre line of the sector.

(vi) Existing cages that meet requirements for track certification and the previous UKA Rule 137 must be replaced no later than 1st April 2008.

(5) The netting for the cage can be made from suitable natural or synthetic fibre cord, or alternatively, from mild steel wire. The maximum mesh size shall be 50mm wire and 44mm for cord netting. The minimum size of cord or wire depends critically on the construction of the cage, but the minimum breaking strain should be at least 130kg. In order to ensure the continued safety of the cage, the netting should be inspected at least every 12 months.

(6) Where it is desired to use the same cage for discus throwing, the installation can be adapted in two alternative ways. Most simply, a 2.135/2.5m concentric circle may be fitted, but this involves using the same surface in the circle for hammer and discus throwing.

Where it is desired to have separate circles for hammer and discus, the two circles must be placed one behind the other with the centres 2.37m apart on the centre line of the throwing sector and with the hammer circle at the front.

The shape of the rear of the cage must then be enlarged using a minimum of 8 panels each having a minimum width of 2.83m and two movable panels each having a minimum width of 2.0m as shown in the diagram. The minimum height of panels, both fixed and movable, for this enlarged cage shall be exactly the same as for the standard cage.

(7) The safety of the hammer cage installation is very dependent on the position and alignment in the arena. The maximum danger sector for all throws, including both left and right handed throwers, is approximately 85°.

NOTE: The key safety and control dimensions of the cage are:-

(i) The 6m spacing between the netting at the front of the cage.
(ii) The gates should be placed so that when in use they extend to a point 1.12m from the centre line of the sector.

Discus Throwing Cage (corresponds with 'Hammer Throwing Cage' at beginning of Rule 137)

(8) All discus throws shall be made from an enclosure or cage to ensure the safety of spectators, officials and competitors. The cage specified in this Rule is intended for use in a stadium. In training areas a much simpler construction may be satisfactory. Advice is available on request from UK Athletics.

NOTE: For safety reasons the standard layout of tracks only permits one position within the arena for the siting of the Hammer/Discus cage. Therefore it is suggested that a combined cage for both Hammer and Discus is used, with a concentric circle, to allow both these events to take place from the same cage.

The recommended position for the cage is centrally located at one or other end of the infield.

(9) The cage should be designed, manufactured and maintained so as to be capable of stopping a 2kg discus moving at a speed of up to 25 metres per second. The arrangement should be such that while stopping the discus there is no danger of it ricocheting off fixed members of the cage, back towards the athlete or over the top of the net. Provided that it satisfies all the requirements of this rule, any form of cage design and construction can be used.

(10) The cage should be U-shaped in plan, consisting of a minimum of 6 panels of netting each having a minimum width of 3.17m as shown in the diagram. The width of the mouth should be 6m, positioned 5m in front of the centre of the throwing circle. The end points of the 6m wide mouth shall be the inner edge of the pivoted netting. The minimum height of the netting panels should be at least 4m.

Provision should be made in the design of the cage to prevent a discus forcing its way through any joints in the cage or the netting or underneath the netting.

(11) The netting for the cage can be made from *suitable* natural or synthetic fibre cord or alternatively, from mild steel wire. The maximum mesh size shall be 50mm wire and 44mm for cord netting. The minimum size of cord or wire depends critically on the construction of the cage, but the minimum breaking strain should be at least 40kg.

In order to ensure the continued safety of the cage, the steel netting should be inspected after every 12 months continuous service.

(12) The maximum danger sector for discus throws from this cage is approximately 98°, including both right and left-handed throwers. The position and alignment of the cage in the arena is, therefore, critical for its safe use.

RULE 138 THROWING THE JAVELIN

(1) Rules 120 and 130 apply.

(2) IN ORDER TO AVOID ACCIDENTS THE CENTRAL THROWING AREA MUST BE ROPED OFF AS A UNIT AT A HEIGHT OF APPROXIMATELY 1 METRE.
ALTERNATIVELY, JAVELIN THROWING SECTORS MUST BE ROPED OFF AT A HEIGHT OF APPROXIMATELY 1 METRE AND TO MAKE A 50° SECTOR INSIDE WHICH THE JAVELIN SECTOR IS CENTRALLY PLACED.

For safety reasons all throws should be preceded by a warning which should be acknowledged by the event officials before the throw commences.

NOTE: Referees are reminded of the need to ensure that discus, hammer and javelin competitions (including warm-up for these events) are not held at the same time within the central throwing area when the standard of any of the competitors is likely to create possible danger to the officials operating within and alongside the respective sectors of these events.

(3) Competitors must be given instructions that implements must be thrown during practice only from the arc. Implements must be returned *by hand* during practice or competition and must not be thrown back to the starting area. The Referee or other appropriate official shall disqualify from competing in the event any athletes who wilfully disobey the above instructions after having their attention drawn to them.

(4) No practice throws shall be allowed after the competition has begun.

(5) Gloves may not be worn, but an elbow protection is allowed.

(6) The javelin must be held with one hand only, and at the grip, so that the little (or fourth) finger is nearest to the point.

(7) No marks shall be placed on the runway but the competitors may place marks at the side of the runway.

(8) It is foul if the competitor touches with any part of the body the lines which mark the boundaries of the throwing area, or the ground outside in the course of an attempt.

(9) The javelin shall be thrown over the shoulder or upper part of the throwing arm, and must not be slung or hurled.

(10) At no time after preparing to throw, and until the javelin has been discharged into the air may the competitor turn completely round so that the back is towards the throwing arc.

(11) Non-orthodox styles are not permitted.

(12) It is a foul if the competitor steps on or beyond the arc or extended scratch line on the ground marked 'N' on the diagram below.

(13) A throw shall be valid only if the tip of the metal head strikes the ground before any other part of the javelin.

(14) The competitor shall not leave the runway until the javelin has touched the ground. When leaving the runway, from a standing position, the first contact with the parallel lines or the ground outside the runway must be completely behind the white line of the arc at right angles to the parallel lines.

(15) Provided that, in the course of a trial, the foregoing rules have not been infringed, a competitor may interrupt a trial once started, may lay the implement down inside or outside the runway, and may leave the runway as required in the second sentence of (14) above, before returning to the runway to begin a fresh trial.

NOTE: All the moves permitted by this paragraph shall be included in the maximum time allowed for a trial given in Rule 120(5).

(16) A foul throw or letting go of the javelin in an attempt shall be reckoned as a trial. If a javelin breaks during a throw it shall not be counted as a trial, provided that the attempt was made in accordance with the Rules. If the competitor thereby loses balance and as a result contravenes any part of this Rule, it shall not be considered as a foul throw.

(17) The arc must be clearly marked on the ground by chalk or otherwise, and all measurements must be made from the nearer edge of the mark first made in the ground by the tip of the metal head of the javelin to the inside edge of the javelin arc along a line from the point of the fall to the centre of the circle of which the arc is a part.

(18) For a valid throw the javelin must land so that the point from which measurement is to be made is within the inner edges of lines marking the sector out on the ground by extending the lines from the centre of the circle of which the arc is a part, through the points at which the arc joins the lines marking the runway.

(19) A steel or fibre glass tape should be used for measurement, and the part of the tape showing the distance thrown must be held by the official at the arc. Alternatively, approved datum measurement equipment may be used, as may a scientific apparatus which has obtained a certificate of accuracy from a nationally recognised standardising organisation.

(20) The throw shall be recorded to the nearest 1cm below the distance measured if that distance is not a whole centimetre.

(20)

To Set Out and Check Sectors for Javelin

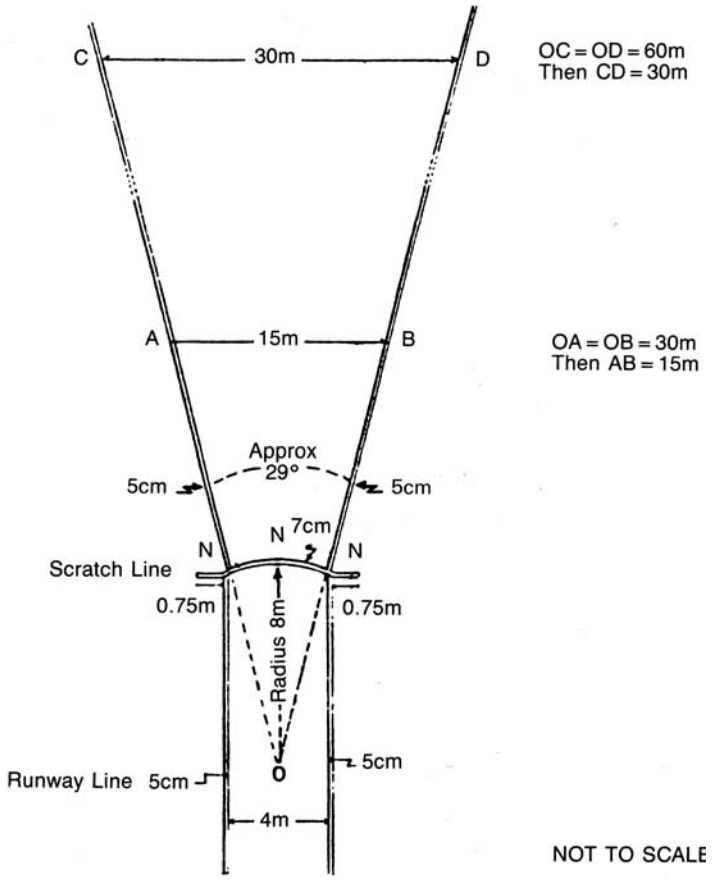

O = Centrepoint through which the tape must be taken when measuring the distance of a throw at the Scratch Line

RULE 139 THROWING THE JAVELIN SPECIFICATIONS

(1) The runway shall be marked by two parallel lines 4m apart, and the throw shall be made from behind an arc of a circle drawn with a radius of 8 metres. Such arc shall consist of a strip painted, or made of wood 7cm in width, painted white and shall be flush with the ground.

(2) The runway shall be level, with a minimum length of 30m and a maximum length of 36.5m. The maximum allowance for lateral inclination of the runway shall be 1:100 and 1:1000 downwards in the running direction.

(3) The outer ends of the sector lines should be marked with flags. It is recommended that the extremities of the Scratch Line should be marked with small flags.

(4) **Construction**

(a) The javelin shall consist of three parts: a head, a shaft and a cord grip. The shaft shall be constructed completely of metal or of another suitable homogeneous material and shall have fixed to it a metal head terminating in a sharp point. If the javelin head is constructed such that a reinforced tip is welded on to the end of the head, it shall be considered acceptable, provided the head is smooth and uniform along the whole of its surface. The surface of the shaft shall have no dimples or pimples, grooves or ridges, holes or roughness and the finish shall be smooth and uniform throughout.

(b) The javelin shall have no mobile parts or other apparatus which during the throw could change its centre of gravity or throwing characteristics.

(c) The grip, which shall cover the centre of gravity, shall not exceed the diameter of the shaft by more than 8mm. It may have a regular non-slip pattern surface but without thongs, notches or indentations of any kind. The grip shall be of uniform thickness.

(d) The javelin shall conform to the following specifications:

MEN	SENIORS/ JUNIORS		UNDER 17		UNDER 15		UNDER 13	
	Min	*Max*	*Min*	*Max*	*Min*	*Max*	*Min*	*Max*
Weight (incl of cord grip)	800gr		700gr		600gr		400gr	
Length	260cm	270cm	230cm	240cm	220cm	230cm	170cm	195cm
Length of metal head	25cm	33cm	25cm	33cm	25cm	33cm	20cm	30cm
Distance from tip of metal head to centre of gravity	90cm	106cm	83cm	101cm	80cm	92cm	70cm	85cm
Diameter at thickest point	25mm	30mm	22mm	28mm	20mm	25mm	19mm	24mm
Width of whipcord	15cm	16cm	15cm	16cm	14cm	15cm	13cm	14cm

WOMEN	ALL AGE GROUPS (except UNDER 13)		UNDER 13	
	Min	*Max*	*Min*	*Max*
Weight (incl of cord grip)	600gr		400gr	
Length	220cm	230cm	170cm	195cm
Length of metal head	25cm	33cm	20cm	30cm
Distance from tip of metal head to centre of gravity	80cm	92cm	70cm	85cm
Diameter at thickest point	20mm	25mm	19mm	24mm
Width of whipcord	14cm	15cm	13cm	14cm

MASTERS	MEN 40-59	MEN 50-59	MEN 60-69	MEN 70-79	MEN 80+
Weight (incl of cord grip)	800gm	700gm	600gm	500gm	400gm

	WOMEN 35-49	WOMEN 50-59	WOMEN 60+
Weight (incl of cord grip)	600gm	500gm	400gm

NOTE: Weight indicated is the minimum for admission to the competition and for acceptance of records.
Manufacturers are recommended to supply equipment for competition which exceeds the specified weights by at least 5gr.

(e) The tapering of the javelin to the tip of the metal head shall be such that the angle of the point shall be not more than 40°.

The diameter, at a point 150mm from the tip shall not exceed 80% of the maximum diameter of the shaft. At the mid-point between the centre of gravity and the tip of the metal head, the diameter shall not exceed 90% of the maximum diameter of the shaft.

NOTE: The extreme point of the javelin may be accepted as 'sharp' and within the maximum angle of 40° provided that the rounding off or flattening due to wear or manufacturing tolerances does not exceed a diameter of 2.5mm.

(f) The tapering of the shaft to the tail at the rear shall be such that the diameter, at the mid-point between the centre of gravity and the tail, shall not be less than 90% of the maximum diameter of the shaft. At a point 150mm from the tail, the diameter shall not be less than 40% of the maximum diameter of the shaft. The diameter of the shaft at the end of the tail shall not be less than 3.5mm.

(g) The cross-section of the javelin shall be regularly circular throughout.

NOTE: While the cross-section should be circular, a maximum difference between the largest and the smallest diameter of 2% is permitted. The mean value of these two diameters must correspond to the specifications of a circular javelin.

(h) The maximum diameter of the shaft shall be immediately in front of the grip. The central portion of the shaft, including the part under the grip, may be cylindrical or slightly tapered towards the rear but in no case may the reduction in diameter, from immediately in front of the grip to immediately behind, exceed 0.25mm.

(i) From the grip, the javelin shall taper regularly to the tip at the front and the tail at the rear. The longitudinal profile from the grip to the front tip and the tail shall be straight or slightly convex, and there must be no abrupt alteration in the overall diameter, except immediately behind the head and at the front and rear of the grip, throughout the length of the javelin. At the rear of the head, the reduction in diameter may not exceed 2.5mm and this departure from the longitudinal profile requirements may not extend more than 300mm behind the head.

NOTE: The shape of the longitudinal profile may be quickly and easily checked using a metal straight edge at least 500mm long and two feeler gauges 0.20mm and 1.25mm thick. For slightly convex sections of the profile, the straight edge will rock while being in firm contact with a short section of the javelin.

For straight sections of the profile, with the straight edge held firmly against it, it must be impossible to insert the 0.20mm gauge between the javelin and the straight edge anywhere over the length of contact. This shall not apply immediately behind the joint between the head and the shaft. At this point it must be impossible to insert the 1.25mm gauge.

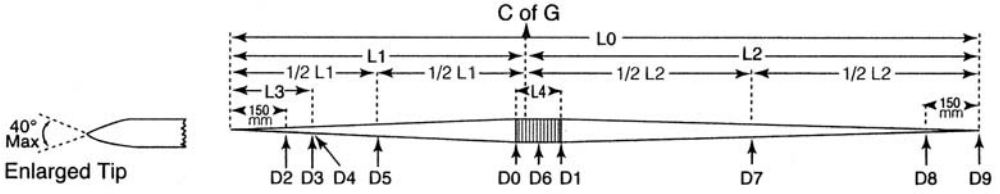

International Javelin

Lengths (all dimensions mm)						Diameters (all dimensions mm)					
		Men		Women				Men		Women	
Serial	Detail	Max	Min	Max	Min	Serial	Detail	Max	Min	Max	Min
LO	Overall	2700	2600	2300	2200	DO	In front of grip	30	25	25	20
L1	Tip to C of G	1060	900	920	800	D1	At rear of grip	–	DO-0.25	-	DO-0.25
1/2L1	Half L1	530	450	460	400	D2	150mm from tip	0.8 DO	–	0.8 DO	–
L2	Tail to C of G	1800	1540	1500	1280	D3	At rear of head	–	–	–	–
1/2L2	Half L2	900	770	750	640	D4	Immediately behind head	–	D3-2.5	–	D3-2.5
L3	Head	330	250	330	250	D5	Half way tip to C of G	0.9- DO	–	0.9 DO	–
L4	Grip	160	150	150	140	D6	Over grip	DO + 8	–	DO + 8	–
						D7	Half way tail to C of G	–	0.9 DO	–	0.9 DO
						D8	150mm from tail	–	0.4 DO	–	0.4 DO
						D9	At tail	–	3.5	–	3.5

RULE 140 COMBINED EVENTS

(1)

(a) The Outdoor Pentathlon for Senior Men consists of five events which shall be held on one day in the following order: Long Jump, Throwing the Javelin, 200 metres, Throwing the Discus and 1500 metres.

(b) The Outdoor Pentathlon for Under 15 Boys consists of five events which may be held on one day, or on two consecutive days in the following order: 80 metres Hurdles, Putting the Shot, Long Jump, High Jump, 800 metres.

(c) The Outdoor Pentathlon for Senior Women consists of five events which shall be held on one day in the following order: 100 metres Hurdles, Putting the Shot, High Jump, Long Jump, 800 metres.

(d) The Outdoor Pentathlon for Under 15 Girls consists of five events which should be held on one day or on two consecutive days in the following order: Long Jump, 75 metres Hurdles, Putting the Shot, (break of one hour), High Jump, 800 metres.

NOTE: If practicable, there should be at least a 30 minute break between events. If the Pentathlon is held on one day the competition should be split into two sessions with a break of one hour between each session.

(2) The Hexathlon for Under 15 Girls consists of six events which shall be held over two days; 75 metres Hurdles (which shall begin the first day), Long Jump, Throwing the Javelin, High Jump, Putting the Shot, 800 metres (which shall be the final event).

(3)

(a) The Outdoor Heptathlon for Senior and Junior Women consists of seven events which shall be held on two consecutive days in the following order: First Day: 100 metres Hurdles, High Jump, Putting the Shot, 200 metres. Second day: Long Jump, Throwing the Javelin, 800 metres.

(b) The Outdoor Heptathlon for Under 17 Women shall consist of the the same events as in but the hurdle event shall be those relating to this age group and the order of events shall be flexible.

NOTE: Rest periods shall be as those noted in (1) above. No claim for a Senior or Junior record will be considered if the order of events differs from that above.

(4)

(a) The Outdoor Octathlon for Under 17 Men shall consist of the following eight events held over two days: High Jump, Long Jump, Putting the Shot, Throwing the Discus, Throwing the Javelin, 100 metres Hurdles, 400 metres (which shall conclude the first day's programme) and 1500 metres (which shall be the final event).

(b) The Outdoor Octathlon for Under 15 Boys shall consist of the following eight events held over two days: 100 metres (which shall begin the first day), 80 metres Hurdles, High Jump, Pole Vault, Throwing the Discus, Throwing the Javelin, 400 metres (which shall conclude the first day's programme), and 1000 metres (which shall be the final event).

(5) The Outdoor Decathlon for Men consists of ten events which shall be held on two consecutive days in the following order: First day: 100 metres, Long Jump, Putting the Shot, High Jump, 400 metres. Second Day: 110 metres Hurdles, Throwing the Discus, Pole Vault, Throwing the Javelin, 1500 metres.

The Outdoor Decathlon for Women consists of ten events which shall be held on two consecutive days in the following order: First day: 100m, Discus, Pole Vault, Javelin, 400m. Second day: 100m Hurdles, Long Jump, Shot Put, High Jump, 1500m.

NOTE: At the discretion of the organisers, it is permissible, where circumstances make it desirable, to decide all the events on the same day. If all of the events are decided on the same day it is permissible to vary the order. No claim for a record will be considered if the order of events differs from that set out above.

(6) The Indoor Pentathlon (Men) consists of five events which shall be held on one day in the following order: 60 metres Hurdles, Long Jump, Putting the Shot, High Jump, 1000 metres.

The Indoor Pentathlon (Women) consists of five events which shall be held on one day in the following order: 60 metres Hurdles, High Jump, Putting the Shot, Long Jump, 800 metres.

The Indoor Heptathlon (Men) consists of seven events which shall be held on two consecutive days in the following order: First day: 60 metres, Long Jump, Putting the Shot, High Jump. Second day: 60 metres Hurdles, Pole Vault, 1000 metres.

(7) The Combined Events Referee shall have jurisdiction over the conduct of the combined events competition. However, the Track and Field Referees, where appointed, shall retain jurisdiction over the individual events within the competition.

(8) In all Combined competitions three trials only are allowed in the Long Jump and in each Throwing Event.

(9) In track events run entirely in lanes at least four competitors should start in each group whenever possible. In other track events at least five competitors should start in each group, and one such group should consist of those competitors occupying the leading positions prior to the final event.

(10) The time of each competitor should be taken by three timekeepers independently. Where fully automatic timing is in operation times shall be

given to 1/100th of a second and scored by using the appropriate tables to 1/100th second.

Only one system of timing may be applied throughout each event. For record purposes, however, electrical times shall be applied regardless of whether such times are available for other competitors in the event.

(11) In the running and hurdles events competitors shall be disqualified in any event in which they have been responsible for three false starts.

(12) Where the hurdles used do not comply with Rule 116(8) or (9) a competitor knocking down three or parts of three or more hurdles shall score no points in that event.

(13) In High Jump and Pole Vault, Rule 121(4) does not apply to a Combined Events competition. Heights will be increased uniformly throughout the competition by 3cm in the High Jump and 10cm in the Pole Vault.

(14) Any athlete failing to take part in any of the events shall not be allowed to take part in any subsequent event in that competition but shall be considered to have abandoned the competition. That athlete shall not figure in the final classification.

(15) The winner shall be the competitor who has obtained the highest number of points in the five, six, seven, eight or ten events as the case may be, awarded on a basis of the IAAF Combined Events Scoring Tables, modified where necessary as indicated above.

(16) In the event of a tie, the winner shall be the competitor who has received the highest points in a majority of events. If this does not resolve the tie, the winner shall be the competitor who has scored the highest number of points in any one of the events. If that does not resolve the tie, the winner shall be the athlete with the highest number of points in a second event, etc. This procedure shall apply to ties for any place in the competition.

RULE 141 RECORDS

(1) An application for a record must be made on the appropriate form which must be forwarded with a copy of the programme, and in the case of a field event, the score card, within 14 days to the Secretary of the appropriate National Association, by the Secretary of the body responsible for the organisation of the meeting at which the performance was accomplished.

(2) If an application concerns a foreign athlete and the claim is for a National Record, a Record of Performance form should be completed and forwarded to the Chief Executive of UKA, together with other appropriate details.

(3) The standard record form shall, as appropriate, state or confirm:

(a) Place.

(b) Date.
(c) Name and affiliation of the competitor.
(d) Performance.
(e) Force and direction or wind.
(f) Correctness as to the distance covered by the competitor in the race.
(g) Correctness as to spacing and type of hurdle used and the number knocked down if not of the International type.
(h) Correctness of time, distance or height claimed.
(i) Correctness of weight, measurement and material of implement.
(j) The time at the end of each lap and the name of the leader for all events over 400m in length.
(k) That the appropriate Rules of UKA and/or the IAAF have been strictly observed.

(4) The appropriate Referee must sign the record form, confirming the accuracy of all the details included in the application form and supporting information.

(5) Claims for outdoor records will not be accepted if the performance was achieved on a wooden surface, or, in the case of all running and walking events, if the track was banked. Separate indoor records are maintained for which these restrictions do not apply.

(6) No outdoor record at a distance of 200m or more shall be accepted if made on a track exceeding 440 yards in perimeter or if not started on the perimeter, except in steeplechase events where the water jump is placed outside the normal 400 metre track.

(7) For outdoor records the maximum lateral inclination of tracks, runways or circles shall not exceed 1:100 and in the running direction 1:1000 downwards; any inclination should be uniform. The inclination of a throwing field shall not exceed 1:1000 downwards in the throwing direction.

(8) When an approved fully automatic electrical timing device is used the time for distances up to and including 10,000m, unless recorded as an exact 1/100th of a second, shall be read and recorded to the next longer 1/100th of a second. For distances over 10,000m the time shall be read and recorded to 1/10th second. Record claims for events up to and including 400m can only be submitted when such a device has been used for timing.

(9) Where a record claim is made when hand timing only is in operation the performance must have been timed by three Timekeepers each of whom should be Grade 1 or Grade 2 (Level 5 or Level 4). Immediately after the race they shall exhibit their watches to the Chief Timekeeper who will decide which time shall be recorded in accordance with Rule 119(6) and complete the Record Application Form appropriately.

(10) All the Track Officials signing the Record Application Form should be Grade 1 or 2 (Level 5 or 4).

(11) For records claimed in Walking Events the Chief Judge of Walking must certify that the competitor complied fully with the definition of walking. The certification shall not be given unless there are 4 Judges of race walking, of whom at least 3 are Grade 1 (Level 5) or on the IAAF Panel.

(12) In a race run wholly or partly in lanes no record shall be accepted where the athlete has run on, or inside, the inner curved border of his or her lane.

(13) For records claimed in Field Events the distance or height must have been measured by three Field Judges using a steel or fibre glass tape, or bar. Alternatively, a scientific apparatus which has obtained a certificate of accuracy from a nationally recognised standardising organisation may be used. The Field Referee should be Grade 1 or Grade 2 (Level 5 or Level 4) and the other Judges signing the result card should be graded officials.

(14) For all outdoor record claims up to 200m on the track and in the Long Jump and Triple Jump information as to wind conditions must be available. If the component of the wind measured in the direction of running behind the runner averages more than 2 metres per second the performance shall not be accepted as a record except as outlined in (19) below. The wind gauge must have been sited in accordance with Rule 112(7) or 126(11)(a) as appropriate.

(15) The periods for which the wind component shall be measured are as follows:

All distances up to and including 100m	10 secs
100m Hurdles and 110m Hurdles	13 secs
Long Jump and Triple Jump	5 secs
200m. commencing as the runners enter the straight	10 secs

Wind speeds shall be recorded in accordance with Rule 112(9) or Rule 126(11)(c).

(16) The record claimed must have been made in a bona fide competition included in the programme of the meeting where it was held. Record claims may be submitted for performances made in heats or qualifying trials, in resolving ties and in Combined Events.

(17) No performance will be accepted in an individual event unless it has been accomplished during an official competition with a minimum of three competitors taking part. At least two relay teams must have participated in any relay race for a record to be considered.

(18) Except in Field Events no performances achieved in a Handicap shall be accepted as a record.

(19) Outdoor records in Combined Events will be accepted only if performances in each event of which the competition consists are certified in accordance with the preceding paragraphs of this Rule, except that in events where wind velocity is measured, at least one of the following conditions shall be satisfied:

(i) The velocity in any individual event shall not exceed plus 4 metres per second.

(ii) The average velocity (based on the sum of the wind velocities, as measured for each individual event, divided by the number of such events) shall not exceed plus 2 metres per second.

(20) In any race decided on the distance covered in a fixed period of time the distance achieved shall be measured to the nearest metre behind the rear edge of the last foot-print of the competitor, i.e. fractions of a metre shall be ignored.

(21) In the case of United Kingdom records UKA will decide whether the competition was a bona fide one and shall have absolute and unfettered discretion in deciding whether to accept or to refuse a record claim. Provided the essential Rules for Competition have been observed it is a matter for UKA to decide whether the omission of any technicality can be ignored.

(22) Events for which United Kingdom All-Comers and National Records are recognised outdoors are:

Men and Women: 100m, 200m, 400m, 800m, 1000m, 1500m, 1 Mile, 2000m, 3000m, 5000m, 10000m, 1 Hour, 25000m, 30000m, 400m Hurdles, 3000m Steeplechase, 4 x 100m, 4 x 400m, High Jump, Pole Vault, Long Jump, Triple Jump, Shot Put, Discus, Hammer, Javelin, Decathlon.

Men only: 110m Hurdles, 4 x 200m, 4 x 800m, 20km Walk, 2 Hours Walk, 30km Walk, 50km Walk.

Women only: 100m Hurdles, 5km Walk, 10km Walk, Heptathlon.

(23) Events for which United Kingdom National Junior Records (Under 20) are recognised outdoors (using Senior specifications only) are:

Men and Women: 100m, 200m, 400m, 800m, 1000m, 1500m, 1 Mile, 3000m, 5000m, 10000m, 400m Hurdles, 3000m Steeplechase, 4 x 400m, High Jump, Pole Vault, Long Jump, Triple Jump, Shot Put, Discus, Hammer, Javelin, Decathlon.

Men only: 110m Hurdles, 10km Walk.

Women only: 100m Hurdles, 5km Walk, Heptathlon.

(24) Events for which United Kingdom All-Comers and National records are recognised indoors are:

Men and Women: 50m, 60m, 200m, 400m, 800m, 1000m, 1500m, 1 Mile, 3000m, 5000m, 50m Hurdles, 60m Hurdles, 4 x 200m, 4 x 400m, 4 x 800m, High Jump, Pole Vault, Long Jump, Triple Jump, Shot Put.

Men only: 5km Walk, Heptathlon.

Women only: 3km Walk, Pentathlon.

(25) Indoor records at 200m and over are only valid if the oval track does not have a nominal length of more than 200 metres.

RULE AMENDMENTS FOR DISABILITY ATHLETICS

PREAMBLE

For competition involving athletes with a disability, this section of the UKA Rule Book shall be used, along with the current UKA rules. It contains the rules which govern an I.P.C. Athletics competition, written in a way which is compatible with the rules of the governing body for athletics. In this way, officials, coaches and athletes may find rules to cover any event in a single document, rather than having to refer to separate books for each group.

Where a rule is mentioned which is different from the UKA rule, the amended rule is the one to be followed. Where a rule is stated which does not exist in the UKA rule book, it must be added to those rules. Where UKA rules are referred to, this shall always be deemed to include I.P.C. rules.

Details of the various IPC Classifications for Disability Athletics are included in Appendix H, together with the appropriate weights and other specifications for these classes within Track and Field.

RULE D16 Advertising and Sponsorship

Note: (Wheelchair Classes)

The racing wheelchair shall be regarded, for the purposes of advertising, as three pieces of equipment; i.e. two large wheels and a frame.

Note: (Classes F32–34, F51–58)

The throwing chair shall be regarded, for the purposes of advertising, as one piece of equipment.

RULE D17 Clothing

Para 5 (Class 11)

Competitors in Class 11 must wear approved opaque glasses or an appropriate substitute in all field events, and in all track events up to, and including 1500m. The opaque glasses or their substitute must be approved by the responsible technical official. When the athlete is not competing, the opaque glasses or their substitute may be removed.

Para 6 (Wheelchair Classes)

The wearing of helmets is compulsory in all individual and team track races of 800 metres and over, including the 4 x 400 metres relay and in all road races.

RULE D24 Doping (All Classes)

All competitors shall abide by the rules relating to doping as set by regulations of the I.P.C. and I.P.C. Athletics Section.

RULE D103 Numbers

Para 4 (Wheelchair Track Classes)

Every competitor must be provided with one number bib to be worn visibly on the back of the chair. For events longer than 400 metres, further number(s) will be worn on the helmet (start number or lane number).

RULE D105 Assistance

Para 2 (Classes 11–12)

Note: In events of 800m. and above, people other than officials may call intermediate times, but this must be done from outside the track, in an area designated for that purpose.

Para 2(a) (Classes 11–12)

Only escorts or guide runners for Classes 11 and 12 athletes will be permitted to accompany competitors onto the competition area. Persons acting as guides or escorts must be clearly identified by wearing a distinctively coloured vest provided by the Organising Committee.

Para 2(b) (Classes 11–12)

The method of guidance is the choice of the athlete. He/she may choose to use an elbow lead, or a tether, or to run free. In addition, the runner may receive verbal instruction from the guide. The guide must not use bicycles or other mechanical means of transport.

Para 2(c) (Classes 11–12)

Methods of guidance: Athletes are encouraged to provide their own guides. However the organisers will provide an appropriate guide if the need has been indicated on the entry form in advance (together with specific details of the standard of guidance required).

Para 2(d) (Classes 11–12)

At no time may the guide pull the athlete, or propel the athlete forward by pushing.

Para 2(e) (Classes 11–12)

Whether or not a tether is being used, the athlete and guide shall not be more than 0.50m apart at all times.

Note: Where extraordinary or accidental circumstances lead to a breach of this rule it shall be the sole responsibility of the Referee to decide the question of disqualification. The principles that will govern such a decision shall include consideration of any danger to or disadvantage suffered by another competitor in the same race.

Para 2(f) (Classes 11–12)

For races further than 400m. two guides are allowed. Only one exchange of guides is permitted for each athlete. The exchange must take place without any hindrance to other athletes, and must take place only on the straight. The intention to change guides must be notified in advance to the Referee. The Referee will determine the conditions of the exchange and will communicate these in advance to the competitors.

Para 2(g) (Wheelchair Classes)
Strapping: If used must be only to the chair and of non-elastic material.

Para 4 Prosthesis (Classes 42–46)
Athletes in classes T42, T43 & T44 shall use leg prosthesis in running events. Hopping is not allowed. In all competitions except running for classes T42, T43 and T44, the wearing of prosthesis is optional.
Note: Competition prostheses are not considered as appliances, which can give the wearer an advantage.

Para 5 (Classes 11–12)
For Class 11, acoustic signals are permitted. However, no visual modification to the existing facility is permitted. In events where acoustic assistance is being used (e.g. Long Jump; Triple Jump and High Jump) complete silence shall be requested from spectators.
Note: Whenever possible, to ensure silence, events in which acoustic assistance is being used should not be timetabled together with other running events.
For class 12, visual modification of the existing facility is permitted (i.e. Paint, chalk, powder, cones, flags, etc.). Acoustic signals may also be used.
For Class 13, UKA Rules will be followed in their entirety, except as noted below. IPC recognises the special needs of deaf-blind athletes, and is keen to encourage and facilitate their participation in competition. In cases where deaf–blind athletes are competing in a competition, some modification to current rules may be necessary. Such modification should only be permitted with the prior approval of the Technical Delegate. In principal, no rule modification that disadvantages any other competitor will be allowed.

RULE 108A WHEELCHAIR SPECIFICATIONS (Classes T32–34, T51–54)
Para 1
The wheelchair shall have at least two large wheels and one small wheel.

Para 2
No part of the body of the chair may extend forwards beyond the hub of the front wheel and be wider than the inside of the hubs of the two rear wheels. The maximum height from the ground of the main body of the chair shall be 50 cm.

Para 3
The maximum diameter of the large wheel including the inflated tyre shall not exceed 70 cm.
The maximum diameter of the small wheel including the inflated tyre shall not exceed 50 cm.

Para 4
Only one plain, round, hand rim is allowed for each large wheel. This rule may be waived for persons requiring a single arm drive chair, if so stated on their medical and Games identity cards.

Para 5
No mechanical gears or levers shall be allowed, that may be used to propel the chair.

Para 6
Only hand-operated, mechanical steering devices will be allowed.

Para 7
In all races of 800 metres or over, the athlete should be able to turn the front wheel(s) manually both to the left and the right.

Para 8
The use of mirrors is not permitted in track or road races.

Para 9
No part of the chair may protrude behind the vertical plane of the back edge of the rear tyres.

Para 10
It will be the responsibility of the competitor to ensure the wheelchair conforms to all the above rules, and no event shall be delayed whilst a competitor makes adjustments to his chair.

Para 11
Chairs will be measured in the Marshalling Area, and may not leave that area before the start of the event. Chairs that have been examined may be liable to re-examination before or after the event by the official in charge of the event.

Para 12
It shall be the responsibility, in the first instance, of the official conducting the event, to rule on the safety of the chair.

Para 13
Athletes must ensure that no part of their lower limbs can fall to the ground or track during the event.

Para 14
Progression by any other method except the competitor pushing on the wheels or hand rims will result in disqualification.

RULE D109 Stations

Para 6 (Classes T11–12)
100m to 800m for Class 11–athletes will compete accompanied by a guide. Each athlete shall be allocated two lanes for himself and the guide. The start lines in a staggered start will be those for lanes 1, 3, 5, 7 etc.

Para 7 (Class 12)
Class 12 athletes shall have the right to be allocated two lanes (for themselves and a guide) in all races run in lanes, and in 800m. races started in lanes. In such cases the start lines in a staggered start will be those for lanes

1, 3, 5, 7 etc. An athlete in Class 12 may opt to use a guide in any running event. If this option is exercised, the rules for Class 11 guiding will apply.

RULE D111 The Start

Para 6 (Wheelchair Track Classes)

Add: "…or with the wheels of their racing chairs."

Para 7 (Classes T32–38)

Add: Where a competitor has a hearing impairment, a flag or any other visual device may be used as well as a pistol.

Para 10 (Classes T35–38, T42–46)

Add Note: A four-point stance is not required by athletes in these classes. It is acceptable for arm amputee athletes to use pads on which to rest stumps at the start. Pads must be completely behind the start line and not interfere with any other athlete. The pads should be a similar colour to the track or of a neutral colour.

Para 10 (Class T 20, T45,46)

Add Note: Some athletes will require their blocks to be pre-set, prior to the race. The appropriate official should be supplied with a list of competitors and a diagram of the required positions, measured in centimetres.

RULE D112 The Race

Para 7 (Wheelchair Track Classes)

Delete: 1.22 metres.

Insert: 0.95 metres

RULE D113 The Finish

Para 3 (Wheelchair Track Classes)

The competitors shall be placed in the order in which the hub of the leading wheel reaches the vertical plane of the nearer edge of the finish line as defined above.

Para 4 (Classes T11–12)

Competitor and guide in a competition are to be regarded as a team. As the athlete crosses the finish line, the guide must be behind him/her.

RULE D115 Qualification from previous rounds.

Para 4 (Classes 11–13)

Track events should have the following maximum numbers (exclusive of guides) assuming an eight-lane track:

CLASS	11	12	13	Wheelchair
100m	4	4	8	8
200m	4	4	8	8
400m	4	4	8	8
800m	4/5*	5*	8	8
1500m	6	8	10	8

5000m	10	10	20	10
10000m	10	10	20	10
Relays	4	4	4	4

* depending on starting arrangements

RULE D118 Relay Races

Para 2 (Wheelchair Track Classes)

Delete: "10 metres" Insert: "20 metres"

Para 4 (Classes T 11–13, Wheelchair Track Classes)

Replace with: "Each team shall be allocated two adjacent lanes. Where it is required for the relay to be run in lanes, the competitors may use either of their two allocated lanes. The lines on the inner of the two allocated lanes shall be extended across the outer of the two allocated lanes to mark the distances of the stages and to denote the scratch lines. Changes will take place as for lanes 1, 3, 5 and 7." The extension of start and exchange box lanes shall be done with tape of the same colour as the existing lane markings.

Para 9 (Wheelchair Track Classes)

Delete: Para 9. **Insert:** "The take-over shall be by a touch on any part of the body of the outgoing competitor within the take-over zone."

Para 9 (Classes T11–13)

A fair exchange is established when the incoming runner passes the baton to the outgoing runner within the take-over zone. The baton exchange may take place either between guides or athletes without restriction, except that the conditions of the method of guidance must be met and the guide be behind the athlete at the moment of entering the exchange zone. The outgoing athlete and guide must both be inside the exchange zone at the moment when the baton is exchanged. Once the waiting runner leaves the take-over zone, he / she shall not re-enter the take-over zone.

Para 11 (Class T12)

Add: One guide per exchange zone will be allowed on the track to help with the positioning of any Class 12 athlete who intends to run without a guide runner. The guide must remain in a position, which does not interfere with the conduct of the race.

Para 17 (Class 11–13)

The relay team must have a minimum of one Class 11 and one Class 12 runner. The relay team shall have not more than one Class 13 runner.

Para 17 (T32–34; 51–54)

In the relay races, teams must include at least one athlete from the more/ most disabled class.

Para 17 (T35–38)

In 4x100m. and 4x400m. relays for ambulant athletes, the composition of the team is open. (Take-over by baton)

Para 17 (Classes 42–46)

In 4x100m. relays for classes 42, 43, 45, the composition of the team shall be: maximum 2 per team from Class 45. (Change by touch in the take-over zone).

In 4x100m. and 4x400m. relays for Classes 42, 44, 46, the composition of the team shall be: maximum 2 per team from Class 46. (Use baton).

In the medley relay (800m.; 400m.; 200m.; 200m.) at least one runner shall be from Class 44, or 43 or 42.

An Open Relay may be offered where there are insufficient athletes of appropriate classes. The change would be by touch or baton as determined in the appropriate rules.

RULE D119 Timing and Photo-Finish

Para 2 (Wheelchair Track Classes)

Amend …..”…. to the moment at which the hub of the leading wheel of the competitor’s chair reaches the perpendicular …..”

RULE D120 Field Events–General Conditions

Para 5 (Wheelchair Classes)

Add: “..Athletes take three throws consecutively. In addition to the time allowed under this rule, a reasonable time will be permitted for an athlete to place the frame in the circle before the commencement of their first trial. This time shall not normally exceed 2 minutes for Classes 32–34, 54–58, and 3 minutes for Classes 51–53. Note: While the responsibility for tying down rests with officials and volunteers, the Technical Delegate will issue specific interpretations at each competition which ensure athletes do not engage in time-wasting tactics.

Para 5 (Wheelchair Classes)

Add: Competition Organisers may stage six throws consecutively.

Para 5 (Classes F11–12)

Add: In field events where competitors receive assistance from callers or guides, the time allowed shall begin from the moment when the official responsible is satisfied that the athlete has completed the process of orientation. Should any competitor request verbal confirmation of the starting of the timing clock; an official shall give such confirmation.

Note: If the athlete loses orientation so that he / she requires to be re-oriented, the clock shall be stopped and only restarted (to include any elapsed time already recorded) once orientation has again been completed.

Para 6 (Wheelchair Classes)

Delete: second sentence.

Para 12 Orientation (Classes F11–12)

An escort may bring athletes to the throwing circle or runway. It is the task of the escort to help the athlete orientate him/herself in the throwing circle or on the runway before the attempt. The escort must leave the circle or runway before the attempt begins. Acoustic orientation is permitted before, during and

after the attempt. Athletes may only be escorted from the circle or runway after the officials have determined whether or not the attempt was a valid one.

If the official in charge of the event decides that an escort who is providing acoustic orientation is in an unsafe location, the judge has the right to require the escort to move.

Para 13 (Wheelchair Classes)

The maximum height of the throwing frame, including the cushion(s), used as a seat, shall not exceed 75 cm. The frame may have a holding bar made of metal or glass-fibre.

Para 14 (Wheelchair Classes)

It will be the responsibility of the competitor to ensure that the frame conforms to all the above rules, and no event shall be delayed whilst a competitor makes adjustments to his frame.

Para 15 (Wheelchair Classes)

Frames will be measured before the competitor enters the throwing circle. Frames that have been examined may be liable to re-examination before or after the event by the official in charge of the event.

Para 16 (Wheelchair Classes)

It shall be the responsibility, in the first instance, of the official conducting the event, to rule on the safety of the frame.

Para 17 (Wheelchair Classes)

All throwing events will be conducted from a circle, diameter 2.135m to 2.50m., into a sector as described in Rule 130.

Para 18 (Wheelchair Classes)

An authorised holding device must be used. If a holding device should break during the execution of a throw, it shall not count as a trial, providing it was made in accordance with the rules. If the competitor thereby loses his balance and commits a foul, it shall not count against him.

Para 19 (Wheelchair Classes)

Competitors shall commence a throw or put from a sitting position, and, if lifting takes place, must keep one foot in contact with the ground inside the circle until the implement is released. Any part of the frame must remain inside the vertical plane of the rim of the circle. The commencement is regarded as the first forward movement of the throw. Lifting cannot take place if at least one part of the upper leg or buttock remains in contact with the cushion or seat until the implement is released.

Para 20 (Classes F42–44)

Add: "Lower limb disability classes may use a running, hopping or standing start in jumping events."

Para 21 (Classes F11–12)

Add: Competitors in Classes 11 & 12 are permitted to use a caller for acoustic orientation. In providing this, the caller must stand in a position that does not hinder the event officials.

Add: Competitors in Class 11 may use a caller to provide acoustic orientation during the approach run in High, Long and Triple Jump, and a guide to assist in positioning the athlete on the runway. Only one person who shall be permitted in the competition area who may serve as caller and/or guide may accompany competitors in Class 12. No additional persons will be permitted in the competition area.

Para 22 (Wheelchair Classes)

Once called, athletes are allowed to move to a designated area away from the throwing area in order to continue to warm up. Should an athlete not answer a call to the throwing area, they shall be debarred from the subsequent trials.

Para 23 (Classes F32–58)

In all field events, the Organising Committee may use the IPC points score system, in order to stage competitions with more than one classification group in one event.

RULE D121 Vertical Jumps–General Conditions

Para 5 (Class 12)

Note: Athletes in Class 12 may place a visual aid on the bar. The responsible IPC Technical Official must approve this.

RULE D122 High Jump

Para 5 (Class F11)

Note after rule: Class 11 competitors may touch the bar as an aid to orientation before commencing the run up. If, on so doing, the athlete dislodges the bar this will not count as an attempt.

RULE D126 Horizontal Jumps–General Conditions

Para 6 (Class F20, F45, 46)

Note: Some athletes will require their markers to be at a pre-set distance from the take-off board, prior to the competition. The appropriate official should be supplied with a list of competitors and a diagram of the required positions.

Para 8 (Classes F11–12)

For Class 11 & 12 athletes **delete** "..to the take-off line." **Insert:** "...to the nearest impression left by the takeoff foot. Where an athlete does not take off from the take -off area, but before it, measurement will be made to the edge of the takeoff area furthest from the pit."

Para 12 (Classes F42–44)

a) If, in the process of jumping, an athlete loses prosthesis, the mark where the prosthesis lands, if it is the closest mark to the take-off board, shall be measured.
b) If the prosthesis is lost during the run-up, the athlete can adjust it and continue within the allowed time, with or without the prosthesis.
c) If the prosthesis lands outside the landing area it shall be counted as a foul and recorded as such.

RULE D127 General Specifications

Para 1 (Classes F11–12)

Add: after rule: For Class 11 & 12 athletes, the takeoff area shall consist of a rectangle 1.00m x 1.22m, which must be prepared in such a way (by use of chalk, talcum powder, light sand etc.) that the athlete leaves an impression on the area with his/her takeoff foot.

Para 9 (Classes F11–12)

Note: For purposes of safety, it is strongly recommended that the minimum distance between the axis of the runway and the sides of the landing area be 1.75m. If this recommendation cannot be met, the Technical Delegate may require additional safety measures.

A drawing of the layout of the jumping area can be found on the IPC Athletics website at www.ipc-athletics.org

RULE 130 General Conditions

Para 6 (Classes F51–53) Note: Athletes in Class 51, 52 & 53 may use strapping or a glove on their non–throwing hand, and anchor that hand to the frame.

Note: Classes F32–34, F54–58 must not use gloves.

RULE 131 Putting the Shot

Para 8 (Wheelchair Classes)

Delete: "...stepped into..." Insert "...entered...".

Add: after " ..stop board.." Insert: "..or any holding device outside the vertical plane of the edge of the Circle".

Add: after " ..iron band". "Only the footrest(s) or any part of the wheel or push rim not touching the circle may be outside the circumference of the circle."

Para 9 (Wheelchair Classes)
Note: This rule shall be waived for competitors using the approved holding device.

Para 11 (Wheelchair Classes)
Note: From start to finish, the movement shall be a straight, continuous putting action.

RULE D132 Specifications
Para 6 (Wheelchair Classes)
Note: A stop board is unnecessary for all athletes competing from frames.

RULE D135 Throwing the Discus
Para 9 (Wheelchair Classes)
Delete: "...stepped into...". Insert "...entered...".
Add: after "..stop board.." Insert: "..or any holding device outside the vertical plane of the edge of the Circle".
Add: after "..iron band". "Only the footrest(s) or any part of the wheel or push rim not touching the circle may be outside the circumference of the circle."

RULE D139 Throwing the Javelin
(Wheelchair Classes)
Note: At end of Rule 139. The rules for the club competition for all athletes in frames will be those of Rule 135 to 137. (as amended, but with "Club" substituted for "Discus" whenever necessary).

RULE D140 Combined Events
Note: Read only those Rules and sections of rules which are relevant to the competition. All events take place over one day.

Para 1 & 2 (Class F51–F58)
Delete: after "..following order." **Insert:**
Class F51: 100m.; Club; 400m.; Discus; 800m.
Classes F52 & 53: Shotput: Javelin: 100m.; Discus; 800m.
Classes F54–58: Shotput; Javelin; 200m.; Discus; 1500m.

Para 1 & 2 (Class 42–46)
Delete: after "..following order." **Insert:**
42 Men & Women Long Jump; Shot; 100m; Discus; High Jump.
44 Men & Women Long Jump; Shot; 100m.; Discus; 400m.
46 Men High Jump; Javelin; 200m.; Discus; 1500m.
46 Women Long Jump; Shot; 100m.; Discus; 400m.

Para 1 & 2 (Class 11–13)
Delete: after "..following order." **Insert:**
Men (in each class): Long Jump; Javelin; 100mıscus; 1500m.

Women (in each class): Long Jump; Shot; 100m; Discus; 800m.

Para 1 & 2 (Class 33–38)
Delete: after "..following order." **Insert:**
33 & 34 Men & Women Shot; Javelin; 100m.; Discus; 800m.
35 & 36 Men: Shot; Javelin; 200m; Discus; 1500m.
35 & 36 Women: Shot; Javelin; 200m; Discus; 800m
37 & 38 Men: Long Jump; Javelin; 200m; Discus; 1500m.
37 & 38 Women: Long Jump; Javelin; 200m; Discus; 800m.

Para 2 (All Classes)
Note: Add after "…between events…" "for each individual athlete. **Delete:** second sentence.

Para 15 (All Classes)
Add: after "..IAAF Rules.." and their variations contained herein."

RULE D141 Records
Para 3 (k)
Add: after IAAF …." And IPC Athletics".

Para 3
Note: In competitions held under IPC sanction or Permit, doping control will be at least by random testing. World Records will be ratified even though the athlete who achieves the record is not tested.

Para 15
Note: see also Rule 112 Para 8 as amended.

RULES FOR ULTRA-DISTANCE TRACK EVENTS

The following rules have been established by the Road Runners Club and are now recognised by UKA for the conduct of track events over 30km. Long-distance track events must be conducted according to the rules of the I.A.A.F. and the UKA, which shall apply except where specifically modified by the following.

GENERAL RULES
RULE 151

The UKA authenticates track records at distances to 50k, this being the longest distance accepted by the I.A.A.F. for a world record. (For longer distances, and for races run on other than the track, UKA maintains a list of 'Best Performances' to distinguish them from I.A.A.F./UKA records).
The categories maintained are 'World Record/Best Performance', 'United Kingdom (All Comers) Record/Best Performance' and 'United Kingdom (National) Record/Best Performance'.
The distances/time periods for which Records and/or Best Performances are recognised are the following: 20, 25, 30, 40, 50 and 100 miles; 20, 25, 30, 50, 100, 150, 200 kilometres; 1, 2, 24 and 48 hours.

RULE 152

The race must be held outdoors on a 400 metre track (with raised border) and in bona fide competition, i.e. more than one competitor and no pacing.

RULE 153

(1) The track must be certified in accordance with the requirements of UKA.

(2) Pacing may be interpreted as taking place when a runner not officially entered in the competition, or a runner entered in the competition who does not start, or a runner who has dropped out of the competition, runs more than 200 metres with the record claimant. The Race Referee has discretion to decide whether the claimant has received unfair assistance.

(3) The event must have been advertised beforehand and a programme must have been produced bearing the claimant's name.

RULE 154 TIMEKEEPING

(1) There should be three Graded Timekeepers, one of whom is appointed Chief Timekeeper, all using timers of a kind approved by UKA.

(2) The Timekeepers must time the race independently, and exhibit their times to the Chief Timekeeper. Each of the three times must be entered on the record application form. The Chief Timekeeper shall return the time of

the race, if two timers agree and the other disagrees, as the time of the two which agree. If all three timers disagree, the middle of the three times shall be recorded as the official time. If for any reason only two timers record the time, the longer of the two shall be taken as the official time.

(3) All times shall be rounded up to the next whole second.

(4) In longer races, where the guaranteed accuracy of watches is greater than +/-0.5 seconds over the period of the race, the BBC radio time signal should be used to judge if any correction factor is required.

RULE 155 LAP TIMES

(1) In every long distance track race the lap times of every competitor must be taken and recorded on a lap scoring board.

(2) Each competitor should have a lap scorer, though a skilled lap scorer may record more than one competitor. A lap scorer may be replaced by another during the race. Lap scorers must sign the boards they have used.

(3) A display clock should be placed at the finish of each lap so that the lap scorers and competitors may read the time. If this is not available, a Timekeeper must call out lap times of all competitors during the race.

(4) An additional record should be kept of the leader's lap times during the race.

(5) Any application for a Best Performance must be accompanied by the lap scoring board of the claimant and of the race leader.

RULE 156 FIXED TIME RACES

(1) Some long-distance track races are held over a fixed period of time (e.g. 24, 48 hours) rather than a fixed distance.
In such races, a competitor need not necessarily be on the track at the end of the race, the winner being the competitor who covers the greatest distance during the period of the race.

(2) A recorder is responsible for marking the exact spot of each runner, which is to be taken at the rear of the runner's foot. The distance is measured by steel tape from the nearest convenient marker. All distances are to be rounded downwards to the nearest metre.

RULE 157 MULTI-DAY RACES

In some multi-day races the runners reverse direction every 3–4 hours. This has been found to reduce the risk of injury. When the signal is given, each runner should complete the lap currently in progress and then reverse direction. During this procedure, runners who have not yet reversed have priority in the inside lane.

RULE 158 GENERAL CONDITIONS

Minor departures are allowed from normal I.A.A.F. and UKA Rules in view of the special nature of long distance track races.

(1) There are no restrictions on the supply of refreshments during the race.

(2) A runner may be accompanied by an attendant for such purposes as refreshments and changes of kit. The attendant is not permitted to render any direct assistance to the runner's progress (this includes pacing-see Rule 153(2)), and must not interfere with other competitors or officials.

(3) A competitor may leave the track and return to the same place on the track provided, in the opinion of the Referee, the time off the track is not excessive.

(4) A competitor may claim a Record/Best Performance at a distance less than the advertised distance of the race, e.g. 100 miles in a 24 hours race or 50 miles in a 100km race.

(5) Women may compete in the same race as men, and female performances shall be eligible for ratification as Records/Best Performances.

(6) Lapped runners are not eliminated from the race.

RULE 159 RECORDS/BEST PERFORMANCES

Until further notice the Road Runners Club will continue to maintain a list of ultra-distance records and best performances on behalf of UKA. An application for a Best Performance shall be sent to the Hon. General Secretary of the Road Runners Club without undue delay, together with the supporting documents required. After the Record/Best Performance has been ratified by the Road Runners Club it will be submitted to the PST for Road Running and the performance will be included when the list of Best Performances and Records is next published.

ROAD RUNNING RULES

In reading these rules the 'Promoter' can be taken as 'Promoting Body'. Where the Race Secretary is mentioned this can refer to the person in the race organisation who performs a similar function.
The rules are collected together such that those affecting the Promoter and the Runner come first. The latter part deals with Club Membership and Team Races. These have been included to help Officials and Club Secretaries.
A separate section deals with rules for long-distance track races.

RULE 201 GENERAL

General Rules, 1–24 apply.

RULES FOR PROMOTERS

RULE 202 GENERAL

(1) Any Promoter wishing to hold a road race must:-

(i) Consult the local Police Force and inform the relevant Local Authorities and Emergency Services.

(ii) Obtain a Road Race Permit from UKA (See Rule 204 below).

(iii) Adopt the Rules of UKA.

(2) The following shall be deemed to be a race under UKA Rules and will require the issue of a Road Race Permit before they can be held:

(i) Events in which awards or prizes are given in accordance with the finishing order of runners and/or

(ii) Events which pay appearance money or otherwise contract athletes to compete.

(3) No Promoter shall allow any road race to be broadcast, either live or recorded, without prior notification in writing to UKA. Such notification should be made in writing to UKA at least nine months prior to the date when the event is to take place. UKA may attach such conditions as it thinks fit. (See Rule 13).

RULE 203 RACE CLASSIFICATION

(1) An open race is one which is open to all eligible runners subject to the restrictions on age and distances as defined in Rule 207.

(2) A closed road race is one which is open only to runners in a particular Service, trade, occupation, business house or educational establishment.

(3) Team races are inter club/organisation/body competitions determined on the performances of eligible runners within a race.

(4) An open team race is open to all clubs affiliated to UKA or to other recognised athletics Governing Bodies. All scoring team members must be eligible first claim members of that club.

(5) A closed team race is limited to clubs affiliated to UKA within a particular category, e.g. Service, trade, occupation, business house, educational establishment. All scoring team members must be eligible members of that club.

NOTE: Team races may be included by Promoters within any race subject to the above classifications.

(6) Promoters must declare in advance which team awards are included within the race and the manner in which they will be decided.

(7) A veterans race shall be confined to male runners who are at least 40 years of age and to female runners who are at least 35 years of age on the day of competition.

RULE 204 RACE PERMITS

(1) All Promoters who wish to stage any road race must apply for a Road Race Permit from the appropriate Association, preferably not less than 6 months prior to the race. (See Rule 12).

(2) In order to obtain a Road Race Permit a Promoter must make an application on the official Road Race Permit Application Form to the Road Race Secretary of the appropriate Association in the manner specified by that Association.

(3) An application for a Road Race Permit must be accompanied by a draft copy of the planned race entry form/advertisement/prospectus, a map of the proposed course and the current Registration Fee on the Road Race Permit Application Form.

The appropriate Association shall have the power to reduce or waive the Registration Fee.

(4) Any Promoter to which a Road Race Permit has been granted by UKA must:-

(i) Include the words 'Under UKA Rules' and the unique Permit Code, as issued to the race when the permit is granted, upon all printed matter associated with the Road Race.

(ii) Make the Road Race Permit available for inspection by any runner or official.

(iii) Impose, in addition to the basic entry fee, an additional entry feee of £1, hereinafter known as the 'Additional Unattached Entry Fee (AUEF)' on every entrant in an open road race who is not a member of an affiliated club. The AUEF is not applicable where a race is confined to runners who are under 18 years of age on the day of the race.

(iv) Within one month of the race being staged, submit the Road Race Promoters' Returns Form (a copy of which is issued with the Road Race Permit) with copies of the full race entry and result list, together with a completed questionnaire form for grading purposes and any monies arising from the Additional Unattached Entry Fees, to the relevant Permitting Authority.

(v) Failure to comply with the requirements of the Permitting Authority in the issue of a race permit may lead to the withholding of future permits to the same Promoter or such other penalty as the Authority deems fit.

RULE 205 THE COURSE

(1) The responsibility for providing a proper course rests with the Promoter who must:-

(i) Take account of any advice given by the local Police Force, Local Authority, and the UKA Course Measurer before publishing details of the course.

(ii) Adequately signpost the course.

(iii) Appoint marshals to direct runners throughout, particularly at intricate parts of the course and at road junctions. The marshals must be fully briefed as to their duties and responsibilities. At major road junctions at least one marshal should be an adult.

(2) Races shall be run on tarmac, concrete or paved roads. When traffic or similar circumstances make it unsuitable the course, duly marked, may be on a bicycle path or on a footpath alongside the road, but should not be on soft ground such as verges or the like.

A course that includes a railway level crossing will only be deemed safe and a permit issued where a written undertaking has been obtained from the Railway Track Authority that no train will use the line on the day of the race.

(3) The Start and Finish area may be in an enclosed ground or athletic arena. If possible the Start should not be on a main road.

(4) If the race is advertised as being of a particular distance, then the correctness of that distance must be verified by a UKA registered and graded Course Measurer.

(i) The course must be measured along the ideal line of running, i.e. the shortest possible route, in the section of the road permitted for runners. The method of measurement shall be by a bicycle fitted with a Jones Counter and calibrated to IAAF standards.

(ii) The measured distance must not be less than the advertised distance of the race, nor should it exceed the advertised distance by more than 0.1%.

RULE 206 REFRESHMENTS

(1) In full Marathons and longer races, Promoters must supply drinks to cater for the entire field at a minimum of every 5km throughout the race.

(2) In races of 10km and above, Promoters must supply drinks at intervals of at least 5km.

(3) In races of less than 10km., drinks may be provided by the Promoter.

(4) A Promoter must provide additional drinks stations on the advice of the Race Medical Officer.

(5) A Promoter should provide drinks for the entire field at the Finish.

(6) No drinks may be carried or taken by a runner other than those provided by the Promoter.

(7) Sponging stations, supplying water only, should be positioned between drinks stations in all Marathon races. It is advisable that drink and sponge stations should be at least 200 metres apart.

RULE 207 AGE LIMITS IN RACES

(1) The Promoter may make such age limits as he/she thinks fit provided that the conditions of the race do not contravene any rules regarding distances which may be run, and provided that the race is not advertised under the title of any of the recognised age categories. (See (3) below).

(2) The maximum distances permitted in open competition for athletes are as follows:

Age Group on day of race	Maximum distance Male/Female
Under 13 years	4000 metres
Under 15 years	6000 metres
Under 17 years	10000 metres
Under 20 years	Up to a marathon
Seniors	Unlimited

(3) For Championships and many other races young athletes are grouped into age categories. The Competition Year extends from 1st October to 30th September in the following year.

(i) Under 13 Boys and Girls (School Years 7 & 8 & some Year 6)

Road Running competitions for Under 13's shall be confined to competitors who are aged 11 on the day of competition, or 12 on 31st August prior to the commencement of the Competition Year as defined above.

(ii) Under 15 Boys and Girls (School Years 9 & 10)

Road Running competitions for Under 15's shall be confined to competitors who are aged 13 or 14 on 31st August prior to the commencement of the Competition Year as defined above.

(iii) Under 17 Men and Women (School Years 11 & 12)

Road Running competitions for Under 17s shall be confined to competitors who are aged 15 or 16 on 31st August prior to the commencement of the Competition Year as defined above.

(iv) Junior Men and Women

Road Running competitions for Junior Men and Women shall be confined to competitors who are aged 17, 18 or 19 on 31st August prior to the commencement of the Competition Year as defined above.

(v) Senior Men and Women

For Road Running competitions a Senior is a competitor who is aged at least 20 on 31st August prior to the commencement of the Competition Year as defined above. In Road Relay competitions Junior Men and Women, as appropriate may compete in Senior events.

(vi) Masters Man and Women

Road Running events for Masters shall be confined to competitors who are at least 35 years of age on the date of the competition.

RULE 208 ENTRIES

(1) Any Promoter applying for a Road Race Permit must set a Closing Date for the normal acceptance of entries.

Any competitor entering after this date may, if the entry is accepted, be charged an additional late entry fee if the Promoter so wishes. (See also Rule 216(6)).

(2) A Promoter must exhibit a listing, or provide a programme, showing all entries received by the published closing date. A list of all entrants, including any late entrants, must be handed to the Referee before the start of the race.

(3) Any Promoter has the right to refuse any entry without assigning a reason, but the reason must be disclosed to UKA if requested.

RULE 209 RACE NUMBERS

Promoters who have contracts with commercial sponsors for the addition of lettering on number cards to be worn at races shall not permit this lettering to exceed 5cm in height, and must ensure that the same style of number is issued to, and worn by, all runners taking part in the race. (See also Rule 18(1)).

RULE 210 PRIZES

(1) Any Promoter wishing to award training grants or subventions must obtain clearance in advance from UKA and adopt the specified procedures applicable to such awards.

(2) Any competitor who is subsequently found to be ineligible for a particular prize or award must return it forthwith on being requested to do so by the organiser.

(3) A Promoter may award team prizes to non affiliated organisations provided that members of such an organisation are not also members of affiliated athletics clubs.

(4) Any runner eligible to compete in the same race in open competition and within an age category (eg. under 21 or masters) who finishes in a position that qualifies for more than one individual prize, shall be allowed to select only one of these prizes, unless the Promoter has decreed otherwise on the race entry form or in other race literature sent to the runner.

RULES FOR RUNNERS

RULE 211 GENERAL

(1) All runners must be eligible as currently laid down by UKA Rules.

(2) Any runner found to have taken drugs prohibited by the IAAF will be disqualified and reported to UKA. It should be noted that if confirmed this could lead to a two year ban from all athletic events worldwide.

(3) Race numbers must be worn on the front of the vest as issued, i.e. not mutilated or folded in any way.

The race number must be so worn that it is visible in full at all times. Failure to comply may lead to immediate disqualification.

(4) A runner must retire from a race immediately if ordered to do so by a medical official of the race.

(5) A runner who retires from a race must not remove his/her number until he/she has reported to an official as having retired from the race.

(6) A runner who competes in any road race which does not have a UKA Permit may thereby render himself/herself liable to suspension. This does not apply in the case of Fun Runs.

RULE 212 CLOTHING

In all races, runners must wear at least a vest and shorts or other garments worn so as not to be objectionable.

RULE 213 TRANSPONDER TIMING

(1) The use of transponder timing systems is permitted provided that:

(a) the system requires no action by an athlete during the competition, at the finish or at any stage in the result processing.

(b) the weight of the transponder and its housing carried on the athlete's uniform, race number or shoe is not significant.

(c) None of the equipment used at the start, along the course or at the finish line constitutes a significant obstacle or barrier to the progress of the athlete.

(2) At the finish the athletes shall still be placed in order in which any part of their bodies (i.e.the torso as distinguished from head, neck, arms, hands, feet and legs) reaches the vertical plane of the nearer edge of the finish line. The Referee shall be final arbiter regarding the finishing order of the athletes.

(3) In competitions where the event promoter chooses to use a transponder timing system, each competitor must wear the necessary equipment, as directed by the event promoter. Failure to wear the necessary equipment as issued may result in disqualification.

RULE 214 ASSISTANCE

(1) No attendant shall accompany any runner in a race unless to assist a blind or partially sighted runner.

(2) No person is permitted to join in a race, whether to accompany the runners for the whole of the distance or any part or stage of the race, unless he/she has been properly entered for that race and is eligible to run.

RULE 215 THE COURSE

(1) All runners must follow the course as designed and follow the normal rules of the road except where otherwise instructed by the Local Police or Local Authority.

(2) Where any part of a road used for a race is open to traffic at the same time as the competition is in progress, a runner must remain on the left hand half of the road (unless directed otherwise by the Police or by a race official).

(3) The Race Referee has the power to disqualify any runner who does not follow the correct course or the instructions of Police and Race Officials.

RULE 216 ENTRIES

(1) Every entry for a race shall be made to the Race Secretary on the official entry form, or the Universal entry form (if acceptable to the Promoter), as approved by the appropriate Association.

(2) Entries shall be made in the competitor's true name as legally registered and must be completed with the correct age/date of birth and other details.

(3) Numbers are issued to the individual athlete completing the application form and are non-transferable except with the specific authority of the Race Secretary.

(4) Where any part of a road used for a race is open to traffic at the same time as the competition is in progress, a runner must remain on the left hand half of the road (unless directed otherwise by the Police or by a race official).

(5) Every entry for a race open only to specific age group(s) shall state the date of birth and the age of the runner in years and months on the day of the race.

(6) A runner whose entry is accepted after the published closing date may at the discretion of the Promoter:

(i) Not be eligible for any individual prize.
(ii) Not be eligible as a scoring team member in a team race.

RULE 217 ADVERTISING

(1) A runner is not allowed to display on his/her person any advertising other than:-

(i) the accepted name, logo and/or badge of his/her affiliated club in lettering which should not exceed 4cm in height.
(ii) The name or logo of the registered Club sponsor. (See Rule 16)
(iii) A single Trade Mark of the manufacturer of the clothing he/she is wearing, which must not exceed 20 square cm, with the lettering a maximum height of 4cm and the total logo a maximum height of 5cm. On lower body attire the logo shall not exceed 20 square cm with a maximum height of 4cm and may only appear once.
(iv) The name of the official sponsors of the race on the number card (See Rule 209).

RULE 218 OBJECTIONS AND APPEALS

(1) Any runner or affiliated club objecting to the conduct of the race, or the result of that race, shall raise that objection with the Race Referee on the day of the race.

(i) If the results are not available on the day, then such an appeal may be made at any time up until 14 days after the publication of the results.

(ii) In such cases the appeal should be made to the Race Referee through the Race Promoter.

(2) If, as a result of an appeal under (1)(ii) above, a runner is disqualified or the race result otherwise altered, the Referee shall inform the Race Promoter of the result, in writing, within 14 days. The Race Promoter must then inform the individual(s) concerned of the ruling and, if required, take steps under Rule 210(2) to recover any prizes or awards made to the athlete(s).

RULE 219 SPARE

RULE 220 SPARE

TEAM RACES

RULE 221 ELIGIBILITY FOR CLUB TEAMS

(1) If a runner is a member of two or more affiliated Clubs, the Club which can show the longest unbroken period of his/her present membership has the First Claim status subject to the following:-

(i) Where athletes are pupils at school, that school shall always have first claim on their services irrespective of any other claim upon them.

(ii) A First Claim member of a club serving in H.M. Forces may, on application to the relevant Territorial or National Association, be deemed, and shall then remain, a First Claim member of that Force and be eligible for representation forthwith.

(iii) Full time students at recognised establishments of Higher Education shall be eligible to compete in Open Team competition for their College or University provided their First Claim Club is not competing in that competition. In the case of a League where there is more than one division, this will be deemed to be the same competition for the purpose of this Rule.

(2) Every scoring runner in an open team race must be a First Claim member of the Club he/she is entered to represent.

(3) First Claim membership of a club which has no road running section shall not debar a runner from competing in a road running team race for the Club which has next claim upon his/her services.

(4) In the event of a Club that has not organised a road running section and subsequently does so, that Club cannot claim the services of any runner who has previously represented another Club in road running team races unless that runner has resigned from membership of the Club which he/she last represented in a road running team race (see (5) below).

(5) A runner who has belonged to, and resigned from, a club cannot represent another club until either the appropriate Association in which the new club's headquarters is situated has approved the transfer or the appropriate waiting period has been served as outlined in Rule 5. (This does not apply if his/her previous club has been disbanded.)

(6) In closed team races, or races confined to runners with a definite National/Territorial/County/District qualification, the first claim rule only applies to those clubs eligible to take part in the team race.

(7) Any runner who wishes to claim exemption from the operation of any of the Rules relating to First Claim membership shall apply in writing in the specified manner to the Secretary of the appropriate Association in whose area the headquarters of the club he/she wishes to represent is situated.

RULE 222 CLOTHING

(1) In team or relay races all competitors must wear registered vests of the team they are representing which are of the same design and colour, unless the Referee has given permission for a change to be made. A Club may have two sets of clothing registered at any one time.

NOTE: This Rule does not preclude the possibility of clothing being different in style between participants in the same team e.g. vests of different length, cut of sleeve or collar etc. Any team clothing should, though, still broadly correspond in colour and design notwithstanding these differences.

(2) A runner failing to comply with the clothing rules in team races will be liable to disqualification from the team race and the team result shall be scored as if that runner had not taken part in the team race.

RULE 223 ENTRIES

(1) Where separate team entries are required, these shall be signed by an authorised member of the club on whose behalf the entry is being made, and the club shall be held responsible for the accuracy of the information given

and for the eligibility of all team members so entered.

(2) A club entering more than one team in a race shall be allowed to select its teams from the total club entry for the race.

(3) In a race where separate team entry is not required, the individual runner will be responsible for the accuracy of the information with regard to eligibility on the entry form.

(4) A runner shall not be allowed to score in such a team race unless his/her name appears in the programme along with the name of his/her affiliated club. If it is impracticable to issue a programme, then a complete list of teams and runners shall be provided for the information of the Race Referee before the start of the race.

RULE 224 TEAM DECLARATIONS (if required)

(1) Promoters must specify, prior to the event, whether clubs are to declare their teams prior to the start of the race.

(2) Promoters may nominate a time before which all team declarations must be submitted.

RULE 225 RESULTS

(1) The results of a team race will first be notified to the Race Referee, who will ensure that all scoring members of a team were eligible to compete before confirming the result.

(2) The ineligibility of a runner in a team race held within a race does not necessarily disqualify the club/team he/she represents. In such cases the result shall be decided as if the ineligible runner had not taken part in the team race.

ROAD RELAYS

RULE 226 ENTRIES

(1) In road relays clubs shall not be allowed to enter more than three times the number of runners entitled to compete per team.

Where the number of stages exceeds eight, the number of entries will be restricted to twice the number of runners entitled to compete per team or 24, whichever is the greater.

(2) A club entering more than one team in a road relay shall be allowed to select the teams from the complete club entry for the event.

(3) Every club/team entry for a road relay shall be signed by an authorised member of the club on whose behalf the entry is being made. The club shall be held responsible for the accuracy of the information given, and for the eligibility of the runners.

(4) A runner whose name does not appear on the club's entry shall not be allowed to compete in a road relay.

RULE 227 RACE NUMBERS

Every runner must wear the supplied number or numbers, which must serve to identify the team and should also identify the stage that the runner is running.

RULE 228 TEAM DECLARATIONS

(1) All teams must be declared before the start of a road relay and the stage order of the runners specified in the manner laid down by the Promoter.

(2) No changes may be made to the declared stage order of runners in a road relay without prior approval of the Race Referee and the Promoter.

RULE 229 RUNNERS

Where a team includes a runner who has already run a stage of the race that team shall not, subject to the entry conditions of the race, be included in the results.

RULE AMENDMENTS FOR DISABILITY ATHLETICS

PREAMBLE

For competition involving athletes with a disability, this section of the UKA Rule Book shall be used, along with the current UKA rules. It contains the rules which govern an I.P.C. Athletics competition, written in a way which is compatible with the rules of the governing body for athletics. In this way, officials, coaches and athletes may find rules to cover any event in a single document, rather than having to refer to separate books for each group.

Where a rule is mentioned which is different from the UKA rule, the amended rule is the one to be followed. Where a rule is stated which does not exist in the UKA rule book, it must be added to those rules. Where UKA rules are referred to, this shall always be deemed to include I.P.C. rules.

RULE D206 Refreshments
Para 6 (Wheelchair Classes)
Note: Competitors may carry their own refreshments.

RULE D211 Rules for Runners - General
Para 3 (Class 11–13, 35–38, 42–46)
In Road races, all athletes will start together, but the finishing order will be determined for each class.

Para 8 (Class 11–13)
The Organising Committee shall provide numbers that distinguish between athletes of each class.

RULE D214 Assistance
Para 3 (Classes 11–13)
Competitors and their guides shall receive assistance at the refreshment stations. Note: Organisers must ensure that officials are aware of the specific problems of safety presented in providing drinks to blind and partially sighted athletes, and that adequate training is given to all assistants involved.

Para 4 (Classes 11–13)
A relay of up to four guides may be used for Class 11 and 12 athletes, but exchanges may only take place at 10 km; 20 km; & 30 km.
Note: It is strongly recommended that organisers ensure that the race takes place in its entirety in good daylight conditions.

RACE WALKING RULES

RULE 300 GENERAL

General Rules 1–24 apply to Race Walking, as do the relevant sections of Track and Field Rules for track walks and Road Running Rules for road walks. In the case of Track and Field or Road Running Rules, where a particular Rule refers to "run", "runner" or "running" then the words "walk", "race walker" or "race walking" shall be taken as substituted and the content of the Rule shall not be affected in any other way. All competitors must be amateurs as defined by the Rules.

RULE 301 DEFINITION OF RACE WALKING

Race Walking is a progression of steps so taken that the walker makes contact with the ground, so that no visible (to the human eye) loss of contact occurs. The advancing leg must be straightened (i.e. not bent at the knee) from the moment of first contact with the ground until in the vertical upright position.

RULE 302 PERMISSION TO PROMOTE

Under the terms of Rule 12(3)(b) promoters of ALL Open Race Walking events require specific permission to stage events. Applications for permission to promote events should be sent at least six months before the proposed date of the event, together with a fee (as determined by the appropriate issuing authority) to the appropriate Honorary Secretary:-

(i) For events to be held in England to the RWA Honorary Secretary.
(ii) For events to be held in Wales to the RWA of Wales Honorary Secretary.
(iii) For events to be held in Scotland or Northern Ireland to the Honorary Chairman of the PST for Race Walking Competition.

An OPEN event is defined as one open to all eligible athletes and all eligible affiliated Clubs, including one restricted to a particular County, District or Territory and/or age group. (See Rule 4).

RULE 303 APPOINTMENT OF JUDGES

All walking races must be judged by judges authorised by the PST for Race Walking Competition. The responsibility for ensuring that races are properly judged rests with the race organiser who, if unable to find the judges from within his/her own Club, should apply to the appropriate National or Territorial Judges' Secretary for judges. Any Application for judges must

include details of the status of the race(s) so that judges of an appropriate grade can be provided. Applications should be made at least three months before the date of the race(s).

RULE 304 SYSTEM OF JUDGING

The system of judging set out in IAAF Rule 230.4 (IAAF System) must be used in all UKA Championships. In these circumstances the Chief Judge shall not operate as a judge but shall act in an administrative capacity on behalf of the other judges. Additionally this system should be adopted in other races with the following exceptions:-

(a) when there are less then three judges in attendance,
(b) when the race(s) is for walkers under 11 years of age,
(c) relays,
(d) point-to-point races.

RULE 305 CLOTHING WHEN WALKING

In order that judges may apply the Rules relating to walking, competitors knees shall normally be bare. If garments are worn that cover the knee, the Referee's permission must be obtained before the commencement of the race, and the Chief Judge notified. Any competitor starting without permission will be disqualified by the Referee.

RULE 306 DISQUALIFICATION

Competitors disqualified by the Referee for any reason, or by the Chief Judge or other walking judges for failing to comply with the "Definition of Race Walking", must immediately retire from the race, remove their number cards and hand such cards to the Referee, or to a Judge as appropriate. Competitors who have been notified of their disqualification must not pass the recorders at the finish.

RULE 307 AGE GROUPS

The age groups for Race Walking events, whether held on the track or on the road, shall be those recognised for Track and Field as identified in Rule 107.

RULE 308 MAXIMUM DISTANCES

The maximum permitted distances for race walking events (track and road) shall be:-

Age Group	Maximum Distance Male/Female
Under 13 years	3000 metres
Under 15 years	5000 metres
Under 17 years	15000 metres
Under 20 years	20000 metres
Seniors	Unlimited

Ages for maximum distances are as at 31st August in the year of competition. It should be noted that for UKA Championships there are maximum times laid down for each event – see Appendix F.

RULE 309 SAFETY

(a) The Local Police Authority should be notified when public highways are to be used for road races and any suggestions made by the police about safety on the road should be followed by the race organiser. Prior to the start of the each race competitors must be warned to take care on the road and that the Referee is empowered to disqualify any competitor who fails to comply with any instruction given by the Referee which involves the competitor's safety, or that of any other road user.

(b) Walking on the footway (unless directed by the police or race officials) is prohibited.

RULE 310 MIXED COMPETITION

Mixed road walking competitions between male and female participants of the same age group shall be permitted for Club, Inter-Club and open events, but not for Territorial, National or UKA Championships.

FELL AND HILL RUNNING RULES

RULE 400 DEFINITION OF TERMS

(1) An "official UKA Fell Race" is one held under UKA Rules for Competition.

(2) **Race Categories**
A fell race is one run on fell, hill or mountain terrain and shall be categorised as follows:

Category A
(a) Should average not less than 76m (250 feet) of climb per 1.6km (mile).
(b) Should not have more than 20% of the race distance on road.
(c) Should be at least 1.6km (one mile) in length.

Category B
(a) Should average not less than 38m (125 feet) of climb per 1.6km (mile).
(b) Should not have more than 30% of the race distance on road.

Category C
(a) Should average not less than 30.4m (100 feet) of climb per 1.6km (mile).
(b) Should not have more than 40% of the distance on road.
(c) Should contain some genuine fell terrain.

(3) **Race Length Categories**
(a) A Category "L" (long) race is 19.3km (12 miles) or over.
(b) A Category "M" (medium) race is 9.6km (6 miles) and over but less than 19.3km (12 miles) in length.
(c) A Category "S" (short) race is under 9.6km (6 miles) in length.
(d) International races affiliated to the World Mountain Running Association, and selection races organised by National Associations for International Races.

(4) **Clubs**
A Club as referred to in these Rules indicates a Club which is affiliated to UKA or one of its constituent bodies.

(5) **National Committees**
For the purpose of these rules the term "National Committees" refers to:-

(a) Fell Runners' Association (England)
(b) Scottish Athletics Ltd. Hill Running Commission
(c) Athletics Association of Wales
(d) Northern Ireland Fell Runners' Association

RULE 401 GENERAL

The General Rules 1-24 apply to Fell Running competitions.

RULE 402 VETERANS

Veteran Age Limits in Races (Men and Women)
For Fell and Hill Running a veteran is a competitor aged at least 40 years on the date of the competition.

RULE 403 REGISTRATION OF EVENTS

All official UKA Fell Races must be registered with one of the National Committees. The registration shall be effected by supplying to the nominated officer of the relevant body details of the race on the form provided and by its subsequent appearance in a published calendar / fixture list / magazine supplement. A nominal charge may be made to cover calendar publication expenses and race insurance.

RULE 404 ADVERTISING AND PRINTED MATTER

Official UKA Fell Races must be advertised and decided under the Rules of UK Athletics. Such advertisement may be abbreviated to "Under UKA Rules".

RULE 405 SAFETY REQUIREMENTS

Official UKA Fell Races must be organised to comply with the Fell and Hill PST's Safety Requirements.

RULE 406 ENTRIES

No runner may take part in any fell race without having entered the race in accordance with the rules and procedures.

RULE 407 ADDITIONAL RULES

All competitors must obey any additional rules drawn up by the race organisers for that particular fell race.

RULE 408 RETIREMENT FROM A RACE

All competitors must ensure that if they retire from a fell race for any reason the fact is reported immediately to the race officials, including those at the finish. Race organisers MUST report infringements to this Rule to the appropriate National Secretary.

RULE 409 TEAM EVENTS

Runners may count in team fell races for their first claim Club only. This Club may be different from their first claim road, cross country or track Club.

RULE 410 AGE LIMITS

Race Organisers must stipulate age limits for their events but the following limits for younger runners must be observed:-

(a) The minimum age for competition is 6 years on the day of the race.
(b) The maximum distances for younger runners shall be:

Ages on 1st January in year of competition	Maximum distance
Under 8 years	1 km
Under 10 years	2 km
Under 12 years	3 km
Under 14 years	5 km
Under 16 years	6 km
Under 18 years	10 km

RULE 411 DISCIPLINARY PROCEDURES

Upon notification of the breaking of any UKA Rule at an official UKA Fell Race by competitors or organisers, the relevant National Committee is empowered to take whatever corrective action is deemed necessary. There is a right of appeal to the UKA Fell and Hill PST. The following time scales shall be adhered to in any such process:

(a) Notification shall be in writing to the relevant National Secretary within fourteen days of the event in question.
(b) The relevant National Committee shall investigate and conclude its findings and make a decision within seven weeks of the event in question.
(c) Notification of the National Committee's decision will be given to the parties concerned within eight weeks of the event in question.

The above are maximum time scales; the process should be expedited as rapidly as possible, hopefully in a briefer time-span than above.

RULE 412 BRITISH CHAMPIONSHIP RANKING LIST

The British Championship ranking list will be drawn up from performances in nominated championship races. Ranking is calculated on scores in up to 3 races; if three scores are used then they must include one of each length category.

CROSS COUNTRY RULES

RULE 500 GENERAL

Rules 1–24 apply to all cross country competitions held under UKA Rules.

RULE 501 CLUBS

A Cross Country Club is defined as one which annually declares to the appropriate Association that it intends to compete in team competition in cross country events.

RULE 502 SPARE

RULE 503 OPEN EVENTS

Open cross country races must be advertised and decided under the rules of the IAAF and UKA. Appropriate entry forms must be used for all individual entries. Ordinary inter-Club races for which no entry fees are charged are not considered as open events.

RULE 504 ENTRIES

All entries must include the full name, address, date of birth and Club of the competitor and Territorial or National membership numbers where appropriate. Any promoter granted a Cross Country Permit by UKA must impose, in addition to the basic entry fee, an additional entry fee of £1 (to be known as the 'Additional Unattached Entry Fee') on every entrant in an open cross country race who is not a member of an affiliated club. The additional entry fee is only applicable to participants in Senior competitions. Additional entry fees collected are payable to the Permitting Authority within one month of the date of the competition and must be accompanied by copies of the full race entry list and results.
Upon changing surname competitors must, for one year, insert both names on all entry forms.

RULE 505 INFRINGEMENTS

No athlete shall join a cross country race who is not qualified to compete. Athletes infringing this rule shall be liable to expulsion from any race under the jurisdiction of UKA and could render their Club liable to disqualification.

RULE 506 THE START

The start should be signalled by the firing of a gun or other similar apparatus. An athlete crossing the starting line before the starting signal is given shall be liable to disqualification.

RULE 507 AGE GROUPS

For Championships and many other races young athletes are grouped into age categories. The Competition Year extends from 1st October to 30th September in the following year.

(i) Under 13 Boys and Girls (School Years 7 & 8 & some Year 6)

Cross country competitions for Under 13's shall be confined to competitors who are aged 11 on the day of competition, or 12 on 31st August prior to the commencement of the Competition Year as defined above.

(ii) Under 15 Boys and Girls (School Years 9 & 10)

Cross Country competitions for Under 15's shall be confined to competitors who are aged 13 or 14 on 31st August prior to the commencement of the Competition Year as defined above.

(iii) Under 17 Men and Women (School Years 11 & 12)

Cross Country competitions for Under 17's shall be confined to competitors who are aged 15 or 16 on 31st August prior to the commencement of the Competition Year as defined above.

(iv) Junior Men and Women

Cross Country competitions for Junior Men and Women shall be confined to competitors who are aged 17, 18 or 19 on 31st August prior to the commencement of the Competition Year as defined above.

(v) Senior Men and Women

For Cross Country competitions a Senior is a competitor who is aged at least 20 on 31st August prior to the commencement of the Competition Year as defined above. Junior Men and Women may compete in Senior events as appropriate and subject to the maximum distances for their age group not being exceeded.

(vi) Masters Men and Women

Cross Country events for Masters shall be confined to competitors who are at least 35 years of age on the date of the competition.

RULE 508 MAXIMUM DISTANCES

Age Group	Maximum Distance Male/Female
Under 13 years	3500 metres
Under 15 years	5000 metres
Under 17 years	65000 metres
Under 20 years	10000 metres
Seniors	Unlimited

RULE 509 TEAM SCORING

The team scoring the least number of points, according to the positions in which the members of the team finish whose positions are to count, shall be the winner; the positions of the non-scoring members of a team, whether it finishes all of its members or not, shall be scored in computing the totals of the other teams. In the event of a tie on points, the team whose last scoring member finishes nearest first place shall determine the result.

RULE 510 MIXED COMPETITION

Permits for mixed competitions will be considered provided all competitors are 17 years or over.

RULE 511 RELAY COMPETITIONS

In cross country relay races where a team includes a runner who has already run a stage of the race, that team shall not, subject to the entry conditions of the race, be included in the results. Competitors must compete within their respective age groups as defined in Rule 507.

RULE 512 TEAM RACES

An Open Team Race is open to all Clubs affiliated to a UKA Territorial or National Association. All scoring members must be eligible first claim members of that Club.

RULE 513 REGISTRATION OF CROSS COUNTRY LEAGUES

National, Territorial and Local Cross Country Leagues must be registered with their respective National or Territorial Association, setting out their Constitution, together with the names, addresses and telephone numbers of their Officers. These details must be updated immediately following the Annual General Meeting of the League.

Before any new Cross Country Leagues are formed at any level, the organisers must apply to the appropriate registering body as identified above before commencing activities. Their application must identify the aims and objectives

of the League, include a copy of the draft Constitution, and the names and addresses of those people intending to establish that League.
Annual affiliation fees are payable to the appropriate Territorial or National Association.

RULE 514 TRANSPONDER TIMING

(1) The use of transponder timing systems is permitted provided that:

(a) the system requires no action by an athlete during the competition, at the finish or at any stage in the result processing.
(b) the weight of the transponder and its housing carried on the athlete's uniform, race number or shoe is not significant.
(c) none of the equipment used at the start, along the course or at the finish line constitutes a significant obstacle or barrier to the progress of the athlete.

(2) At the finish the athletes shall still be placed in order in which any part of their bodies (i.e.the torso as distinguished from head, neck, arms, hands, feet and legs) reaches the vertical plane of the nearer edge of the finish line. The Referee shall be final arbiter regarding the finishing order of the athletes.

(3) In competitions where the event promoter chooses to use a transponder timing system, each competitor must wear the necessary equipment, as directed by the event promoter. Failure to wear the necessary equipment as issued may result in disqualification.

TRAIL RUNNING COMPETITION RULES

RULE 601 GENERAL

Rules 1–24 apply to all trail running competitions.

RULE 602 DEFINITION OF TERMS

(1) In the context of athletics, trail races are primarily along footpaths and bridlepaths marked on Ordnance Survey maps as 'public rights of way'. They are 'highways' to which pedestrians have unrestricted lawful access in England and Wales. Towpaths, forest drives, farm cart tracks and paths in parks etc. from which motorised traffic is excluded, are also trails when the owner's permission is obtained.

(2) Trails may include connecting stretches of public road and/or private land without a path when the owner's permission has been obtained. However for championships the courses must be on trails as defined in Rule 602(1) for at least 60% if the race is longer than 50km, 70% if the race is between 21.1 and 50km and 80% if under 21.1km. Non-championship events should follow this rule as closely as possible.

(3) Trail races may be of any length. Their length and the total climb should be measured as accurately as possible on Ordnance Survey maps.

(4) By their very nature trails normally have several types of surface under foot (eg grass, sand, gravel, earth, stone, tarmac, disused railways etc) and are therefore often described as 'multi terrain'.

(5) Most trail races are traditional point to point races, but some involve unusual features:

(i) 'Supported Races' are those where coaches, families or team managers are permitted to give competitors refreshments or provide changes of clothing along the course.

(ii) 'Self Sufficiency Races' require competitors to carry everything they need. Except that in ultra races and in hot weather the organiser may provide water at intervals to prevent dehydration.

(iii) 'Kanter Races' require competitors to choose their own routes using trails and a sequence of visiting check points. These are given as grid references on Ordnance Survey maps.

(iv) 'Staged Races' are those where the course is broken into separate stages with rests at the end of each stage. Competitors run every stage and their times are aggregated to determine the winner.

(v) 'Extreme Races' are self sufficiency races of over 100km that include a section most competitors will run at night.

(6) 'Waymarks' are permanent official signs.

(7) 'Routemarks' are temporary signs placed out by race organisers.

(8) 'Ultra Distance' is defined as further than a marathon, ie over 42.2km.

RULE 603 SPARE

RULES FOR ORGANISERS

RULE 604 COURSE DESIGN

(1) **Degree of Hazard.** Courses that use rights of way over mountains, high moors and coastal cliffs tend to attract competitors who enjoy a challenge. When catering for athletes with a sense of adventure the courses must NOT be designed to be potentially dangerous.

(2) **Bad Weather Alternatives.** Races that use rights of way over mountains, moorland, coastal cliffs or anywhere else that becomes hazardous in rain, fog, strong winds or snow must have a safe alternative route.

(3) **Short Cuts.** The possibility of competitors taking short cuts should be examined. If these go over dangerous terrain the organiser must consider taking appropriate measures when preparing the risk assessment.

(4) **Protecting the Environment.** The need to avoid damage to the environment should always be borne in mind. Therefore the maximum number of competitors that the course can accept should be calculated in consultation with the appropriate authority.

(5) **At the Beginning.** Safety and protection of the environment require that the first part of the course should be wide enough for the expected number of competitors. Therefore:

(i) Fields with growing crops should be avoided.
(ii) There should be no stiles, kissing gates or other obstacles so early on in the course as to make it likely that long queues will build up.
(iii) Similarly steep and narrow descents should be avoided until the competitors have spread out.

(6) **Tests of Navigation and Night Running.** When planning races involving skilled navigation or night running it should be borne in mind that physical hazards become more severe, that lost competitors may trespass and that noise may disturb sleeping house-holders.

RULE 605 RACE PERMITS

(1) Organisers of trail races must obtain a UK Athletics race permit. They are available from the Trail Running Association (TRA).

(2) A TRA permit will only be granted to races when the organiser undertakes to follow UK Athletics Code of Conduct – Trail Running. Contact must be made before applying with:

(i) The first aid organisation.
(ii) A rescue service if a part of the course is over wild country.
(iii) The police if the course crosses or part of it goes along a road.
(iv) The owners of any land it is wished to cross over which there is no right of way. It is strongly recommended that all farmers whose property is crossed are informed of the race even though the course is on rights of way, and that the Country Rights of Way Officer is informed of the route.

RULE 606 ADVERTISING

(1) Advertisements and competitors' applications must cover the following points:

(i) That the race is held under UK Athletics Rules of Competition.
(ii) The approximate length and approximate total climb of the course.
(iii) Any age or other limitations.
(iv) If survival equipment has to be carried.
(v) Entry fee(s) and unattached runner's levy.

(2) The publicity should also state:

(i) Competitors take primary responsibility for their own safety.

(ii) The general nature of the course. This is particularly important if the course crosses mountainous or wild terrain and a level of experience is required.
(iii) Method of navigation and if a level of skill required.
(iv) Structure of prizes and mementos.

RULE 607 ORGANISER'S RESPONSIBILITIES

The Organiser has the following responsibilities:

(1) **Risk Assessment.** Carrying out the risk assessment required by UK Athletics Code of Conduct to make sure all hazards are reduced to an acceptable level.

(2) **Railway Level Crossings.** If the course includes a railway level crossing, the Organiser must obtain a written undertaking from the Railway Track

Authority that no train will use the line within the period of one hour before the first competitor reaches the crossing and one hour after the last competitor.

(3) **Course Inspection.** The Organiser, not the Referee as is the case with other disciplines, must inspect the course during the week before the race takes place. In the case of long races he may delegate this duty to deputies, but he will remain ultimately responsible.

(4) **Inclement Weather.** The Organiser must be prepared to take firm decisions in good time to shorten the race, use the alternative course or cancel the race if the weather is predicted to become inclement.

(5) **Control of Race.** The Organiser must ensure that race headquarters can monitor and control the race so that, if an accident occurs, or a competitor becomes lost, help is directed to the competitor in trouble without delay.

RULE 608 PREPARATION OF COURSE

(1) **Up to 10km.** A course of 10km or less should be adequately marked and marshalled. On such short courses the leading competitors are usually running too fast to read maps and narratives.

NOTE: Detailed information on this is given in The Guide To Organising Trail Races obtainable from the Trail Running Association, 141 Davies Road, West Bridgford, Nottingham, NG2 5HZ for £3.

(2) **Over 10km.** On courses longer than 10km maps and course narratives may be used instead of, or in addition to, routemarks, waymarks and marshals. Details on the various methods are given in *The Guide to Organising Trail Races.*

(3) **Refreshment Stations.** Unless stated otherwise in the advertisements and competitors' brief, refreshment stations with at least drinks should be not less than 10km apart and stocked with sufficient for the whole field. In warm weather extra stations with separation as little as 5km may be necessary.

(4) **Sponge Stations.** In hot weather sponge stations may also be needed, particularly in races over 30km long.

(5) **Location of Stations.** Stations must never be located at road crossings. If located where competitors will run along a road they must be set back so that stopping competitors are not standing on the road.

(6) **Check Points.** Check points should be sited away from roads.

(7) **Clearing Up.** The sites of refreshment and sponge stations must be cleared up afterwards.

(8) **Crossing Roads.** If the course crosses roads the Organiser, when preparing the risk assesment, must consider the risk involved and take appropriate measures. These may involve:

(i) Notices being put out to warn traffic.
(ii) Notices before the crossing to warn competitors.
(iii) Marshals, bearing in mind that they only have authority to stop competitors crossing in front of vehicles. Police alone have the power to stop traffic.

(9) **Along Roads.** UK Athletics rules for road running shall apply for parts of a course that are on roads, eg competitors must run on the left of the road.

(10) **Supporters' Cars.** At longer races, designated car parking areas for supporters should be set up where they will not cause traffic congestion that could lead to accidents. They may need marshals.

RULE 609 COMPETITORS' INFORMATION

(1) **Competitors' Briefing.** The nature of the race and instructions relating to safety must be formally communicated to each competitor in the competitors' information.

(2) **Display of Permit.** The race permit must be displayed at the race registration.

(3) **Weather Forecast.** The weather forecast should be displayed if the race is an ultra or the course goes over wild countryside.

(4) **Availability of Risk Assessment.** The full risk assessment must be available to any official or competitor who asks to see it.

(5) **Prizes.** See Rules for Competitors Rule 616.

RULE 610 AGE LIMITS

Subject to satisfying HUE 'Adventure Activity Licensing Regulations' for youths under eighteen, the maximum distances permitted for the following age groups are:

Under 8 years	1km
Under 10 years	2km
Under 12 years	3km
Under 14 years	5km
Under 16 years	6km
Under 17 years	10km
Under 18 years	25km
Under 20 years	45km

RULE 611 ADDITIONAL RULES

Race organisers may draw up additional rules for their events which must be obeyed by competitors as though they were UK Athletics Rules.

RULE 612 SPARE

RULES FOR COMPETITORS

RULE 613 COMPETITORS' RESPONSIBILITIES

Competitors have the following responsibilities:

(1) **Safety.** Primary responsibility for their own safety.

(2) **Course.** Follow the whole of the course as designed. If they get lost or take a wrong turning competitors must return to the correct course where they left it. They may be assisted in regaining the correct course.

(3) **Other Rights of Way Users.** Unless the County Council has closed the route to all other users, recognise they have equal rights to be on the path and be courteous.

(4) **Behaviour at Obstacles & Narrow Paths.** Competitors should not jostle at stiles and other obstacles. Nor should they push past slower runners on narrow paths. The correct etiquette is for the overtaking runner to shout 'track' and the slower to step out of the way as soon as practical, standing still if necessary.

(5) **Country Code.** The Country Code must be obeyed.

(6) **Running on Roads.** Remain on the left-hand side of the road or on any footpath except when directed otherwise by the police or a marshall.

(7) **Injured Competitors.** If they come across another competitor who is ill or hurt they MUST give assistance.

(8) **Voluntary Retirement.** If they wish to retire from the race they must report this to the nearest race official and to the finish, and then remove their number. If they become physically incapable of personally reporting, they should endeavour to get a message passed to an official.

(9) **Compulsory Retirement.** Retire immediately if asked to do so by a race official.

RULE 614 HANDLERS & SUPPORTERS

(1) **Assistance Whilst Running.** A competitor may only be accompanied by an attendant for all or part of a race when the rules for that particular race authorise this. Failure to comply may lead to disqualification of the competitor being helped.

(2) **Supporters' Cars.** When the competitors' brief states that handlers and supporters following the race may park their cars only at designated places,

failure to comply may lead to the disqualification of the competitor being supported.

RULE 615 LATE ENTRIES

The Organiser may accept entries after the published closing date, but decide such competitors are not eligible for individual prizes and/or are not eligible to be scoring team members. These limitations should be made clear at the time of accepting the entry.

RULE 616 TROPHIES & PRIZES

Any Organiser wishing to award training grants or subventions must obtain clearance in advance from UK Athletics.

APPENDIX A

INDOOR COMPETITIONS—CODE OF PRACTICE

A1 Events

Competitions may be held at such race distances and in such field events as are appropriate to the size of track and other facilities available. Hammer, discus and javelin are considered unsuitable for indoor competition.

A2 Tracks and Measurements

Tracks for indoor meetings should comply with Rule 108 with the following amendments:

(a) Banking of bends is permitted;
(b) Races up to and including 60m must be run on a straight course in lanes, and it is recommended that races up to and including 200m should be run in lanes. In 400m races the first two complete bends on a track of 200m or less should be run in lanes, and a 'break' line shall be marked on the track in a distinctive colour;
(c) Hurdle events are as specified in Rule 116(14)
(d) In events run in lanes or partly in lanes there shall be only one competitor per lane.

A3 Field Events

(a) **High Jump** Owing to the common use of banked tracks, a slope is acceptable in the approach run insofar as the banking forms part of the approach, but not less than the final 5m of an approach shall be on level ground. No competitor may use any other form of banking device or ramp;
(b) **Long Jump, Triple Jump and Pole Vault** In the long jump, triple jump and pole vault competitors may start their approach on the banking of the oval track provided that the last 40m is on the level runway.
(c) **Shot**
  (i) It is essential for safety reasons that a stopping device is provided at the end of the putting area.
  (ii) Specifications for the indoor shot are the same as outdoor, but special plastic or rubber cased shots are permissible, which shall be spherical in shape with a smooth surface. If these special shots are used, the maximum, diameter allowed is increased to 145mm (7.26kg) and 130mm (4kg). Both types of shot may not be used in the same competition.
  (iii) The circle may be portable or permanent. If the circle is portable it shall not vary from the level of the landing area by more than $\pm$3cm.

(iv) The sector shall be 34.92° and shall be extended as far as the limitations of space allow.

(v) Fibre boards may be used in the landing areas to facilitate marking of the landing of the shot.

A4 Combined Events

The Combined Events are as specified in Rule 140.

A5 Records

The IAAF and UKA recognise Records for Indoor Competitions but for Senior Competitions only. Claims for records should be made in accordance with Rule 141.

A6 General Guidance

Indoor areas are invariably much smaller than outdoor ones and it is vital that every effort is made to keep the centre of the track clear, particularly the space between Timekeepers or Judges and the finish line. Similarly, the area at the start must be kept clear of persons and equipment. Warming-up on the track must be forbidden.

Photo-finish equipment should preferably be sited above the Timekeepers' stand.

APPENDIX B
TIMEKEEPERS—CODE OF PRACTICE

B1. Timekeepers should report to the Meeting Secretary and the Chief Timekeeper at least 30 minutes before the first Track event.

The Chief Timekeeper should report to the Meeting Manager/Secretary before leaving the Meeting, to ensure that all necessary paper work has been completed.

B2. Individual Timekeepers should not be required to take more than one time in sprint races. Good practice requires that Timekeepers should not take times other than those requested by the Chief.

B3. In distance races on the track with large fields, timers with multiple-memory functions or print-out facilities (but not programmable computers) should be used where possible, to ensure that all runners are timed to 1/10th sec. Otherwise or in addition a Running Watch should be used.

A Lap Chart is advisable if lapping takes place.

B4. For deciding fastest losers, hand times to 1/100th sec must not be used.

B5. Calling of intermediate times. Provided that there are sufficient timekeepers available, intermediate times in races of more than one lap should be called at the Start line and at the Bell. In the case of the Steeplechase, because of the varying distance of the lap on different tracks, calling should take place at the Finish line. Variations may be made at the Chief Timekeeper's discretion, but normally calling will not take place at intervals of less than one lap except for the Bell time. In Mile races, intermediate times should be called at the $\frac{1}{4}$ miles. On indoor tracks of 200m., times should be called every 400m, plus Bell time, unless otherwise required. (N.B. Lap times should be recorded every 200m, in accordance with UKA Rule 119(5) and IAAF Rule 165(3).

Timekeepers going out on duty should be aware of safety and courtesy to athletes, officials and spectators.

B6. To enable Timekeepers to comply with UKA Rule 119(5) and IAAF Rule 165(3), a clearly visible marker should be placed on or near the inner edge of the track to indicate the distances of 1K, and 2K, in the 3000m. Steeplechase. Similar marks should be placed at any other distance required e.g. 1500m in Mile, 3K. in 2 Miles etc.

B7. The Chief Timekeeper is responsible for any intermediate times given over the Public Address System. The Chief can provide this service:

(a) where there is an automatic device with a time display on the track, by appointing the operators of this device to be official timekeepers for giving intermediate times, provided that the Chief is satisfied that such times are sufficiently accurate.

(b) by a telephone line or radio link to the Announcer.
(c) where the Announcer's box is situated close enough to the Finish line, by stationing a Timekeeper adjacent to or, with the agreement of the Announcer, in that box.

If none of these are possible, then no intermediate times should be announced.

B8. Relays. Split times for Relay events should not be taken if the individual legs are less than one complete lap. The split times shall be taken as the baton crosses the centre of the take-over box.

In the case of the 4 × 400m, competitors may be required to run in lanes for three bends; the first take-over is therefore staggered and in each lane the centre of the take-over box should be marked on the track by a white line with a green mark super-imposed; Timekeepers recording times for teams in lanes 2-8 therefore should take up positions on the outside of the track opposite these marks for the first take-over. For lane 1 and for all subsequent take-overs, the centre of the take-over box is the Finish line, and times should be taken from the stand.

It is recommended that Timekeepers allocated to each team for split times should revert to their normal finishing position at the finish.

B9. Where Photo-Finish is in operation, the Chief Timekeeper should ensure that the hand times are communicated to the Chief of P/F as soon as possible after the completion of a race.

B10. In Cross-country and/or Road races with large numbers of competitors, there may come a time when the competitors are too closely packed for times to be given for every position. When this situation arises, Timekeepers should thereafter identify a runner's number and record this with a time as frequently as possible. In practice this can be done every 5 seconds or less; these times and numbers can then be matched with the Judges' positions and every runner can be accredited with a time within the above limits.

Wherever possible, computerised records of results should bear the official hand times.

APPENDIX C

ELECTRONIC DISTANCE MEASUREMENT CODE OF PRACTICE

(C1) The Field Referee(s) is/are in sole charge of all the field events.

(C2) The operator in sole charge of the EDM instrument must be experienced in its use.

(C3) It should be accepted standard practice that a comparison between a standard calibrated steel band and the EDM instrument will be carried out prior to the meeting commencing.

(C4) For record purposes, if only one EDM instrument is available, then immediately after completing the measurement, the instrument should be checked against previously pre-set reference points before the marking prism is removed. The Field Referee must be consulted/advised of the action.

(C5) The official result card will be completed by the official appointed to observe and confirm the readings taken by the EDM instrument operator. Card 2 will be completed by the official appointed to confirm the scoreboard display.

A further card can be made available, for information purposes only, at the site of the event. To avoid any delay in the progress of the event, this card should be completed by an official not directly involved in judging the athlete's trial.

(C6) To help avoid delays in the progress of the event, the leader should not wait for the result of the trial to appear on the scoreboard before calling the next competitor for her/his trial.

(C7) Officials allocated to the duties involving the use of the marking prisms must be fully conversant with their correct use before the start of the event.

(C8) All officials must be made fully conversant with the signal to be used to indicate that the EDM reading has been concluded.

(C9) Any type of communications equipment must be monitored for reliability both before and during the meeting. Preferably, a channel should be reserved for the use of the EDM team exclusively if the equipment is not situated adjacent to the event.

(C10) A log book detailing the servicing and maintenance of the EDM instruments should be kept.

(C11) As a precautionary measure, a steel or fibreglass tape should be kept available at the event in case of malfunction of either the EDM or communication equipment.

APPENDIX D

TRACK AND FIELD OFFICIALS

(1) APPOINTMENT OF OFFICIALS

(a) The following officials should be appointed at every Track and Field Meeting:

A Referee for Track Events.
A Referee for Field Events. If there are to be several field events it may be desirable to appoint two Field Referees, one for the throwing events and one for the jumping events. (In meetings with many field events, further sub-divisions of the Field Referee's duties may be carried out by the appointment of further Referees for specific duties.)

Track Judges/Umpires.
Field Judges.
A Chief Timekeeper.
Timekeepers.
A Starter - two if there are many track events, one of whom should then be designated Chief, supported by a Marksman (Starter's Assistant) and two or more if there are many track events, one of whom should then be designated as Chief Marksman.

Marksmen (Starter's Assistants).
Clerks of Course for field events.
Clerk of Course for track events.
Announcer(s).
Competitors' Steward(s).
Recorders and other Stewards as may be necessary.
Walking Judges (where walking events are included in the programme).

(b) For meetings of a higher level, e.g. Territorial Championships and above, the following additional officials should be appointed:

A Meeting Manager, who shall have overall responsibility for the control of the meeting.
A Photo-finish Team (as required).
Additional Starter(s) so that there is a team of not less than 3, thereby enabling Start Recallers to be used (see below).
Electronic Distance Measurement Team (as required).
Scoreboard Operators and Two-way radio Stewards.
A team of Assembly Stewards.
Seeding Officers.

Press and Results Stewards.
Presentation Stewards.
Doping Control Stewards.

(2) DUTIES OF OFFICIALS

All officials share the responsibility for events starting to time and for the meeting to be run smoothly and without undue waste of time. Officials who are not officiating regularly should always consult the Rules for Competition before going to an athletics meeting.

Meeting Manager
The Meeting Manager shall assume overall responsibility for the running and control of the meeting.

The Field Referee
Shall:
(i) have charge of all field events;
(ii) administer the rules for competition relating to disqualification of athletes;
(iii) allocate Judges to particular events and duties;
(iv) check that equipment and markings conform with specification rules in liaison with the Technical Manager (if appointed).
(v) announce to Judges and ensure that the competitors are informed of the number of trials;
(vi) ensure that all field events commence at the due time;
(vii) supervise the measurement of performances;
(viii) check the final results;
(ix) decide in the event of any difference of opinion between the Field Judges: the Field Referee's decision shall be final;
(x) deal with any disputed point as provided by the Rules for Competition.

Field Judges
Shall
(i) see that field events are carried out in accordance with the Rules for Competition;
(ii) decide in which order the competitors shall be placed;

In jumping for distance, separate Judges shall be responsible for:
(i) deciding if the take-off is fair;
(ii) marking the point in the landing area from which measurement is to be made;
(iii) operating the wind gauge (the operator shall measure and record the wind speed for the designated period of time and relay this information to the Judge in charge of the event).

In jumping for height, two Judges should keep a record of the jumps and check their recordings at the end of each round. The height of the bar should be measured when the bar is raised, particularly if standards or records are being attempted.

In throwing for distance separate Judges shall be responsible for:

(i) deciding if the delivery is fair;
(ii) marking the point of landing of the implement from which the measurement is to be made.

Before the start of each event the Judges should ensure that the right competitors are present, that they are correctly dressed and are wearing numbers as on the programme and in accordance with the Rules for Competition.

Measurement Officials may be appointed, especially if Electronic Distance Measurement is to be used, and they are then responsible to the Field Referee for measuring and recording distances.

The Track Referee

Shall:
(i) have charge of all track events;
(ii) administer the Rules for Competition relating to disqualification of athletes;
(iii) allocate duties to Track Judges and Umpires;
(iv) decide in the event of any difference of opinion between the Track Judges: the Track Referee's decision shall be final;
(v) deal with any disputed point as provided by the Rules for Competition.

If, in the opinion of the Track Referee, circumstances arise so that justice demands that a race already concluded should be contested again, the Referee shall have power to declare the race void and it shall be contested again, either on the same day if practicable, or on some future occasion. The Track Referee in his absolute discretion shall decide when the race shall be re-run.

Track Judges and Umpires

Shall:
(i) see that the proper distance of each run is covered;
(ii) decide the order in which the competitors finish.

Lap scorers should be appointed for races of longer than 1500m to record each competitor completing each lap. The duty of lap scorer can be incorporated with that of 'finish judge'. One of the scorers shall call, or show by number cards, to the competitors the number of laps still to be completed and ring the bell for each competitor to indicate the start of the last lap.

Judges should be allocated as Umpires to watch the competitors, especially on bends and over hurdles and water jumps, and shall report promptly to the Referee any infringement of the rules of racing.

Judges should also be allocated to supervise relay take-overs and to work out the results of team races.

A Wind Gauge Operator should be appointed for races up to and including 200m. The operator should measure and record the wind speed for the designated period of time and relay this information to the Track Referee.

The Chief Starter

Shall:
- (i) allocate duties to the other Starters;
- (ii) administer the Rules for Competition relating to disqualification of athletes at the start of races;
- (iii) have absolute control over all matters relating to the start;
- (iv) ensure that the track events keep to timetable.

The Chief Marksman

Shall:
- (i) allocate duties to the other Marksmen;
- (ii) assist in keeping the track events to timetable.

Starters and Marksmen

The Starter shall have complete control of the starting of a race. Marksmen are appointed to act under the direction of the Starter, to make the draw for the stations at the start (if Seeding Officers have not been appointed) ensuring that the right competitors are present, correctly dressed and wearing numbers in accordance with the programme. Marksmen should then assist the Starter, at his/her instruction, in watching for infringements of the rules during the starting procedure.

At meetings of a higher level, Start Recallers are appointed from within the team of Starters. If in the opinion of the Starter or Start Recaller, the start was not fair, the competitors must be recalled. In practice, the first opportunity to recall rests with the Starter, whose decision on whether to issue a false start warning shall be final.

The Chief Timekeeper

Shall:
- (i) allocate duties to the Timekeepers on the team;
- (ii) declare the time to be recorded for each competitor;
- (iii) administer the Rules for Competition applicable to timekeeping.

Timekeepers

Timekeepers shall time each event independently and, in the event of a difference between their returns, should exhibit their watches to the Chief Timekeeper, who shall decide which time is to be returned.

Walking Judges
For walking races, Walking Judges shall be appointed. The Walking Judges shall disqualify any competitor whose mode of progression they consider fails to comply with the definition of walking in the Rules for Competition.

Technical Manager
The Technical Manager, under the direction of the Meeting Manager, shall be responsible for ensuring that the track, runways, circles, arcs, sectors, landing areas for field events and all equipment are in accordance with specification in Rules for Competition.
The Technical Manager shall normally have overall supervision of the Clerk of Course (Track) and Clerks of Course (Field).

Clerk of Course (Track)
The Clerk of Course (Track) with the Track Referee shall ensure that the course is correctly set out and kept perfectly clear. When hurdles and steeplechase races are included in the programme, the Clerk must ensure that all hurdles and barriers are correctly set and placed and that they are removed from the track when no longer required. In addition, the Clerk shall ensure that all equipment such as judges' stand, bell, batons, etc. is ready for use.

Clerks of Course (Field)
The Clerks of Course (Field) with the Field Referee shall ensure that all markings are correct as required by the Rules for Competition, that take-off boards are clean and firm and landing areas ready for use. The Clerks shall ensure that all equipment necessary for maintaining runways, circles and landing areas is in a fit state for competition, that brooms, rakes, rollers, etc. are available as required and that Judges are provided with marking spikes and tapes as necessary.

They are responsible for the provision of implements for practice and competition and must see that all implements are removed from the site of the event as soon as the competition is completed.

Seeding Officers
The Seeding Officers shall have the responsibility of allocating competitors in track events to heats or subsequent qualifying rounds according to their previous best performance. They shall prepare the draw for the finals.

In the case of heats (first rounds) if possible, the seeding shall be based on the best performance at previous meetings during the current or previous season. In the case of subsequent rounds, the seeding shall be based on the performance in the earlier heats (previous rounds) for events up to and including 400m, and in events above this distance the original performance list

should be used, unless a better performance was achieved in the previous round.

Seeding Officers should consult with the Track Referee before the start of the meeting to establish the qualifying conditions which the Track Referee would wish to have implemented for progressing to subsequent rounds/finals.

A *random* draw for lanes should be made.

Rule 115 states "In the preliminary rounds of races, at least the winner, and preferably the winner and second should qualify for the next round or final. Any other competitors to qualify shall be decided either according to their places or according to their times. Where any qualifying position is decided by time, only one system of timing may be applied in determining times. Where photo-finish equipment is in use the Chief Photo-finish Judge shall consider, where necessary, the actual time recorded in 1/1000ths of a second by the competitor in deciding qualifiers by time". (A mixture of hand and electric times shall not be used for the same qualifying conditions).

In Territorial and National Association Championships seedings and draws may be carried out in accordance with IAAF Rule 166. If such an option is utilised then that Rule must be strictly observed and the athletes notified of its implementation in advance of the competition.

Stewards, Announcers, etc.
The Numbers' Stewards are responsible for seeing that all competitors are issued with the number bibs allotted to them in the programme for each particular event, and the Assembly Stewards that they are dressed in accordance with the Rules for Competition. The Assembly Stewards must produce the competitors for each race at the marshalling point at the time required by the Chief of Final Assembly, and furnish that official with a list of starters.

Announcers, Results Stewards, Press Stewards, together with other officials as may be necessary or desirable, should also be appointed depending upon the importance of the meeting and the number of events and competitors.

(3) PEER GROUPS

The procedures for upgrading to Grade I (Level 5), invitation to hold Referee/Chief status and selection and appointment to National/International meetings involve two groups. The groups are – Peer Group and Territorial Officials Secretaries Group. The process is supported by the Head of the Track and Field PST, Track and Field coordinators and the Individual Services Team at UKA.

Peer Groups
There are currently four Peer Groups, one for each of the following disciplines:

- Field Judges
- Track Judges
- Timekeepers
- Starters and Marksmen

Each Peer Group has three representatives. Members of the Peer Groups must be of Chief or Referee status (with the exception of Grade 1 (Level 5) Marksmen), as they will be expected to consider recommending Grade 1 (Level 5) Officials to hold Chief or Referee status. The term of office is from 1st October through to the 30th September of the following year. In order to ensure a wide representation of territories, disciplines and to enable as many officials as wish to join the Peer Group, the following **guidelines for selection** apply:

- there will not normally be three officials in one discipline from the same territory
- no official may be a Peer Group member for more than three consecutive years
- no official is eligible for reappointment to their Peer Group for a further two years

Apppointment to the Peer Group
Based on the guidelines for selection, the following process has been adopted for appointments to Peer Groups:

March	Territorial Officials Secretaries consult with their Officials Committees
June	A maximum of two officials may be nominated by each Territory for consideration for each discipline, of which only one can be from their Territory, to the Officials Coordinator
July	Nomination lists are distributed to Territorial Officials Secretaries, to be placed in a ranking order and returned
August	Ranking lists are considered by the Head of Track and Field PST and the Coordinator
September	Relevant coordinator invites all the current eligible and new Peer Group members to serve for the following year

The role of the Peer Group
The Peer Groups have three important functions:
(1) Consider recommendations for upgrading to Grade 1 (Level 5)
(2) Consider invitations to hold Referee/Chief status
(3) Consider territorial nominations for selection of officials for each of the major International/National meetings

Recommendations for Grade 1 and invitations for Referee/Chief status
The following process has been adopted for upgrading officials to Grade 1 (Level 5) and inviting officials to hold Referee/Chief status

September — Territorial Officials Secretaries provide recommendations for upgrading to Grade 1 (Level 5) or nominations to hold Referee/Chief status, including all relevant paperwork, records of experience forms for the relevant number of years and all confidential reports

November — Two day meeting
Day 1: Peer Groups consider the paperwork for each official and propose an outcome
Day 2: One member of each Peer Group shares proposals with Territorial Officials Secretaries and one of the following recommendations will be made:

i. Upgrade or invite
ii. Defer for further information
iii. Not upgrade or invite

These recommendations are discussed by the Teritorial Officials Secretaries who make the final decision. If the decision is not unanimous, the chair of the meeting (Head of Track & Field PST) may call for a show of hands and, if there is a split decision, the chair has the casting vote.

December — Candidates are notified of the outcome of the application/nomination. The Territorial Officials Secretary will provide feedback for unsuccessful applications/nominations.

Criteria for **not** upgrading or inviting may include:
- Confidential reports which have no final information about how the official performed at the meeting in question
- Insufficient number of relevant or acceptable reports
- Insufficient experience of meetings of a relevant level such as Territorial
- Failure to meet the basic requirements of the next grade, e.g. no evidence of work as Clerk of Course in Field or Track as Grade 2 (Level 4).

Selections for International/National meetings
All officials on the current UKA Active Grade 1 (Level 5) list are sent a copy of the relevant winter and summer availability for each of the major meetings and return the list, including a nil return, by a specified date to the UKA offices or the Appointments Coordinator as appropriate. Officials failing to meet the specified timescales **cannot** unfortunately be taken into account when making allocations.

The returns are collated by discipline, territory and relevant availabilities. They are supplied to the Territorial Secretaries, along with a provisional allocation, in time for their selection meetings (indoor selections are made in November

and outdoor selections are made in January). The total allocation is based proportionately on the following:

- the number of officials available in each discipline for each meeting
- the territorial discipline allocation distributed amongst the meetings under consideration

The nominations, including 'chiefs' from each territory are collated and the lists provided to the Peer Group members to consider. The Peer Groups review the nominations with reference to the importance of each meeting and the strength of the whole team.

One member of the Peer Group will then make recommendations, including 'chief' appointments, to the meeting of the Territorial Officials Secretaries. The lists are discussed, amended if necessary and approved by this meeting.

APPENDIX E

TESTING AND GRADING OF TECHNICAL OFFICIALS

TRACK AND FIELD OFFICIALS

During 2006–2007 Officials will see several changes within the sport. UK Athletics, the Home Countries and Territories are reviewing current procedures for the recruitment, training, development and support of Officials. Officials gradings have recently also been reviewed to align with IAAF qualification and existing qualified officials have been transferred across into this new system.

Until 2007 all current procedures for training and appointing officials will be maintained. Both these procedures and the new procedures to be adopted from January 2007 are outlined here.

UKA currently operates a scheme for testing and grading of track and field technical officials; this scheme is co-ordinated by the Co-ordinator for Officials Development, the Territorial Associations, Counties, Districts and the Services.

The disciplines for graded technical officials are: Field Judges, Starters/Marksmen, Timekeepers and Track Judges, currently the initial grade for discipline specific officials is Grade 4. Under the new scheme this will become Level 2. (Level 1 being a cross discipline introduction to assisting with competition.)

Applications from those interested in becoming officials should be made through the appropriate County, District, Service or Territory. Details of the relevant contact name can be obtained in the first instance through UK Athletics, Athletics House, Central Boulevard, Blythe Valley Park, Solihull, B90 8AJ. Tel 0870 998 6800, Fax 0870 998 6752 Email information@ukathletics.org.uk

CURRENT GRADING REQUIREMENTS FOR TRACK AND FIELD OFFICIALS

Until January 2007 those new to the sport can become Level 2 Officials either via the existing Grade 4 or through the new Level 2. Existing Officials will be able to progress via the current pathway until January 2007, but qualifications will be denoted on their pass and licence under the new system.

Grade 4 Level 2
Grade 3 Level 3
Grade 2 Level 4
Grade 1 Level 5.

Until January 2007, upgrading and qualification may be via the existing system or through the new system currently being developed. Consequently, details of both are provided.

GRADE 4 Beginners can become Grade 4 by either:

a) achieving at least 65% in a written examination paper;
   or
b) in exceptional circumstances, by the preliminary examination administered orally by a Grade 1 official in the appropriate discipline;

   or
c) as Timekeepers achieving at least 70% in a practical test;
   or
d) officiating at a minimum of 5 meetings during the season (for Field Judges this must include judging at least 1 jumping and 1 throwing event) and by having been given at least 1 satisfactory report and a verbal or written debriefing by an official of Grade 3 or above in the same discipline. However, any candidate who becomes a Grade 4 official through this procedure will lose this graded status if he/she does not pass a Preliminary Written Examination, or for Timekeepers a Practical Test, within 3 years.

Counties, Districts and Services are responsible for maintaining lists of officials at this grade.

GRADE 3 To achieve this grade, officials must:

a) have had a minimum of 1 years satisfactory experience as a Grade 4 in their chosen discipline;
b) have been given at least 1 satisfactory written report by an experienced higher graded official in the same discipline;
c) officials graded under (d) above may only be upgraded to Grade 3 when they have passed the Preliminary Written Examination paper;
d) Timekeepers must have passed both Practical Test and Written Examination and have at least 1 year's practical experience from the date of either test, supported by a satisfactory report from an experienced higher graded Timekeeper.

Counties, Districts and Services are currently responsible for maintaining lists of officials at this grade.

GRADE 2 To achieve this grade, officials must:

a) have a minimum of 2 years' satisfactory experience as a Grade 3 official in their chosen discipline
b) have been given at least 2 satisfactory written reports by experienced higher graded officials in the same discipline;
c) Timekeepers must reach a practical average of at least 80% on reports submitted;
d) Field Judges must have had experience in all 8 field events.

Territorial/ National Associations and Combined Services are currently responsible for maintaining lists of officials at this grade.

GRADE 1 To achieve this grade officials must:

a) have a minimum of 3 years' satisfactory experience as a Grade 2 official in that discipline:
b) after at least two summer seasons as a Grade 2 official, the candidate may be invited by their Territorial/ National Association to take the Advanced Examination.(Note that in 2007 an Advanced Examination for Starter/ Marksmen will be introduced).
c) have been given at least 3 satisfactory written reports from Grade 1 officials. These reports must be from 3 separate meetings and written by 3 different officials. Two of these meetings must have taken place in the season of recommendation. Ideally, one of the 3 reports should be from another region and only one may be from an indoor meeting;
d) For Field and Track officials an additional satisfactory written report from a Grade 1 official must cover performance of the candidate acting as Clerk of Course Field or Track as appropriate;
e) Timekeepers must have maintained a practical average of at least 90% on reports submitted.

The UKA Official's Coordinator is responsible for maintaining lists of officials at this grade.

Notes

(1) The reports referred to throughout the grading scheme are expected to be obtained from higher graded officials having a minimum of 1 year's experience in a higher grade within the same discipline as the official seeking upgrading.

(2) It is emphasised that the qualifying time in each grade referred to above is the minimum possible time before upgrading can be considered.

(3) There will be a rigorous annual review of the Active Grade 1 list. The following criteria will be strictly adhered to:

(a) a mandatory return to the Territorial/ National Secretary of a satisfactory annual record of experience sheet. This should show the official being active at all levels of the sport;

(b) any official who is inactive at National/ International level will be removed from the list;

(c) any officials who would not be put forward by their Association for a National meeting in any 2 year period will be removed;

(d) Officials who have been removed from the National Active list under b) or c) above may request to be reinstated by the UK Official's Coordinator after consultation. They may also request reinstatement through their Territorial/ National Association which must supply supporting evidence from the previous season that the official concerned is once again fully active at this level.

(4) The Grade 1 list will include the following annotations:- "" for those who have been appointed to Referee/ Chief status and "1" for those awarded IAAF Level 1 status.*

(5) Grade 1 is the highest technical grade denoting full commitment. Consequently, an official may only hold Grade 1 status in a single discipline.

CHIEFS AND REFEREES

An appointment to the list of Chiefs / Referees is based on management and leadership ability in addition to the technical ability required to achieve Grade 1 status. To be appointed to this list officials must satisfy the following criteria:

a) have a minimum of 4 years' experience as a Grade 1 official;
b) have a minimum of 5 satisfactory written reports whilst acting in a relevant Chief/ Referee capacity from "starred" Grade 1 officials on the UK Active list. Ideally one of these reports should be from an official of another Association;
c) at least 2 reports must be from the most recent season;
d) reports on performance during the first 2 years as a Grade 1 official may not be considered.
e) additional reports from Meeting Managers may also be considered;
f) two of the reports may be from the same official, but these may not be from meetings in the same year.
g) for appointment to Track Referee the official must have shown an ability to interpret accurately a photofinish image.
h) for appointment to Chief Starter one of the accompanying reports must relate to the candidate's performance acting as a Chief Marsksman.

Notes

(1) Only outstanding officials will be appointed as Chief / Referee.
(2) There will be a rigorous scrutiny of all worksheets and reports.
(3) Each appointment will be considered in detail.
(4) Duty schedules produced by the candidate should accompany reports.
(5) The majority of gradings on the Confidential Report should be in the "excellent" column.
(6) Worksheets should show evidence of long, many-evented meetings as well as prestigious ones.
(7) Reports should be reviewed in respect of the type of meeting, any pressures and how the candidate dealt with problems.
(8) Any Chief / Referee whose Territorial / National Association would not put them forward for a National / International in that capacity in any 2 year period will lose their Chief / Referee status on the UK Active List.

UPGRADING PROCEDURE FOR OFFICIALS

The relevant "Officials Committee" (or Working Group), is required to monitor the progress of all officials, to collate all reports provided by those officials and to make the necessary arrangements for additional reports to be obtained in appropriate cases. The relevant Officials' Committee also has the responsibility to assist in the preparations of candidates for examinations.

For upgrading to Grade 3–the County, District or Service will be responsible for recommendations for upgrading to this grade. Recommended officials will be required to submit to the County, District or Service a list of the meetings at which they have officiated during the previous season. The respective Territorial/National Associations or Combined Services will be notified of recommendations made by the County, District or Service for confirmation, record purposes and issue of formal notification of upgrading.

For upgrading to Grade 2–the County, District or Service will make recommendations to their respective Territorial/ National Association or Combined Services for upgrading to this grade, to be accompanied by the relevant written reports and lists of meetings officiated at during the previous two seasons together with a personal application from the candidate. The Association or Combined Services will consider all such recommendations and be responsible for appointments to this grade. The Association or Combined Services will also issue formal notification of upgrading to those appointed.

For upgrading to Grade 1–Territorial and National Associations will make recommendations for upgrading to this grade. All recommendations need to be accompanied by the relevant written reports and list of meetings officiated at during the previous three seasons. The UKA Coordinator will consider all such recommendations and be responsible for appointments to this grade and will also issue formal notification of upgrading to successful candidates after discussion with the relevant peer groups and the Territorial/ National Association Officials' Secretaries Working Group.

Notes

(1) Officials on the Combined Services list wishing to progress beyond Grade 2 must be registered with a Territorial/ National Association.

(2) Grade 1 is the highest technical grade which will be achieved by officials.

WRITTEN EXAMINATIONS AND PRACTICAL TESTS

(a) **Preliminary.** A sound, basic knowledge of the relevant rules for competition and some practical experience is necessary to achieve success. The answers required are brief and normally no more than one sentence long. These examinations are arranged by the County, District or Service who are responsible for local organisation and supervision. The papers are set by UKA which will also provide answers and decide upon the pass mark. The Secretary of the Territorial Officials' Committee will provide the examination question papers and arrange for their marking by selected Grade 1 officials, notify each candidate of the result and issue

grade cards where appropriate. In the case of Timekeepers, the grade card, in addition to the result card must show whether the grade is awarded for a pass in the written examination or the practical test. The results will also be sent to the County, District or Service organising the examination. The candidates will pay an examination fee for each test.

Notes:

(1) The time allowed for the preliminary papers is 1 hours for Field, Timekeeping and Track and 2 hours for Starters / Marksman. The pass mark is 65%.

(2) The current Starter / Marksmen paper is in two parts. All candidates are required to take both parts at one sitting and to obtain 65% in each part in order to be awarded a pass. This requirement is to ensure that candidates who wish to officiate only as Marksmen are also familiar with the duties and procedures of Starter in addition to those of Marksmen. Prospective Starters must have attended a course of instruction in the safe handling of starting pistols. The instructor will issue a statement to this effect which will be held by the Territorial National Officials' Secretary.

(3) The examination year will run from 1st May until 30th April and will be split into two six monthly periods–1st May until 31st October and 1st November until 30th April. Candidates who fail an examination in one period will not be allowed to sit it again in the same period. Examinations sat after 1st May will be based on Rules / Procedures coming into force on the preceding 1st April.

(4) All examinations shall be conducted in accordance with instructions supplied to the nominated invigilators.

(5) Lectures or discussion periods for potential officials are often held by Counties or Clubs during the winter and attendance at these will be of considerable value, as will study of the relevant current instruction booklet.

(b) Practical Tests

In addition to the Written Examination, Timekeepers are also requires to take a Practical Test. The test will be arranged by the Territorial/ National Association and supervised by a Grade 1 Timekeeper appointed by that Association. Candidates' performance over 40 races will be judged against either that of the Grade 1 Timekeeper or electric timing. A returned time within 0.10 seconds of the "Master" will be regarded as correct.

Both the examination result notification to the candidate and the test card should indicate clearly that the result is for a Practical Test.

(c) Advanced

Officials who have served a minimum period of 2 years in Grade 2, and are considered to have shown Grade 1 potential, may be invited at the discretion of their Territorial / National Association to sit the Advanced

Examination. These papers are designed to test the greater depth of knowledge and practical experience as would be required at the highest level of competition including the duties of Chiefs and Referees. Candidates have to show that they are familiar with both International (IAAF) and Domestic (UKA) Rules and Procedures, which means that more detailed answers are required at this level than for the Preliminary Examinations.

The papers are set by UKA which also provide the answers and arrange for their marking by selected Chiefs / Referees. Territorial Associations will be responsible for local organisation and supervision of the examination.

Notes:

(1) A new Advanced Examination for Starters / Marksmen will be introduced in 2008.

(2) The time allowed for the advanced paper is 2 hours and the pass mark is 75%.

(3) Papers will be marked from set answers.

(4) Candidates unsuccessful in the Advanced paper are not eligible to re-sit the examination in the same examination period.

(5) All examinations shall be conducted in accordance with instructions supplied to nominated invigilators.

(6) When inviting a candidate to take the Advanced Examination, Territorial / National Associations should name a senior official in the relevant discipline who will guide the candidate's preparation.

Syllabuses for both preliminary and advanced examinations are given on the following pages.

EXAMINATIONS

Specific discipline requirements for both the preliminary and advanced examination are listed below. In addition to these requirements both examinations will reflect issues relating to Health and Safety. Workshops are available through UK Athletics. The Advanced examinations will also require knowledge of allocating duties to teams and an interpretation of those duties.

Syllabus for Preliminary Written Paper–Track Judges

1.	**Rules of Competition at they affect track Judges:**		*UKA Rules*
	a)	Clothing and Footwear	17, 102
	b)	Competitors' numbers	18, 103
	c)	Assistance as related to track events	21,105
	d)	Allocation of lanes and stations	109
	e)	Use if starting blocks	110
	f)	Start of Race	111
	g)	Heats and fastest losers	115
	h)	Rest periods between heats and next round	115
	i)	Infringements and disqualifications of competitors	111,112

j)	Judging the finish and ties	113,114
k)	Hurdle races and Infringements	116
l)	Steeplechase, layout of course and infringements	117
m)	Relay races–rules for take–over	118
n)	Team races–scoring procedure	100
o)	Protests against the conduct or placing of another competitor or team	106
p)	Wind Gauge operation	112(7)(8)(9)

2. Procedure when reporting for duty
3. Specific duties when judging, acting as umpire, lap recorder, or operating the lap board and bell
4. Procedure when judging and essential equipment required
5. Duties of Track Judges in relation to the Track Referee
6. Knowledge of duties of Clerk of the Course Track

Books of Reference: UKA Rule Book
UKA Instructional Book: How to Judge Track Events

Syllabus for Preliminary Written Paper–Timekeepers

1.	**Rules for Competition as they affect Timekeepers:**		*UKA Rules*
	a)	Types of watches and their uses	119
	b)	Co–operation with the Starter	111(8)
	c)	Starting and stopping the watch	111(7),113,119 (2)
	d)	Intermediate times	112(6),119(5)
	e)	Recording times	119(4)-(8)
	f)	Fastest losers	115(1)
	g)	Records	119(9),141(9)
		An acquaintance with all the track rules is desirable	

2. Procedure when reporting for duty
3. Practical knowledge of the types of watches used, and reasons for their use in particular events
4. Sources of human errors by Timekeepers
5. Responsibility of a Timekeeper to the Chief Timekeeper
6. Use of "split" devices for recording lap, intermediate and multiple timings
7. Lap calling and "splitting"
8. Coping with requests for "fastest losers"
9. Positioning of Timekeepers and general techniques of timekeeping 119(3)

10. Practical difficulties, and how errors may be minimised
11. Procedure for timing races when using a recorder

Books of Reference: UKA Rule Book
UKA Instructional Book; Timekeeping

Syllabus for Preliminary Written Paper–Field Judges

1.	**Rules for Competition as they affect Field Judges**		*UKA Rules*
	a)	Clothing and footwear	17.102
	b)	Numbers	18,103
	c)	Assistance relating to Field Events	21,105
	d)	Protests	106
	e)	General competition rules	120
	f)	Deciding ties	121(7), 126(3), 130(3)
	g)	Rules for particular events	
		i) High Jump	121,122,123
		ii) Pole Vault	121,124,125
		iii) Long Jump	126,127,128
		iv) Triple Jump126,127,129	
	h)	General rules governing throwing and putting events for distance	130
	i)	Rules for particular events:	
		i) Putting the Shot	131,132
		ii) Throwing the Discus	135,136,137
		iii) Throwing the Hammer	133,134,137
		iv) Throwing the Javelin	138,139

2. Procedure when reporting for duty
3. Procedure when judging, and equipment required
4. Knowledge of duties of Clerk of Course Field

Books of Reference: UKA Rule Book
UKA Instructional Book: How to Judge Field Events.

Syllabus for Written Paper–Starters and Marksmen (Starters Assistants)

1.	**Rules for Competition as they affect Starters:**		*UKA Rules*
	a)	Clothing and footwear	17,102
	b)	Numbers	18,103
	c)	Assistance at the start	105(2)
	d)	Stations	109
	e)	Starting blocks	110
	f)	The start	110
	g)	Combined Events	140(11)
	h)	Heats and fastest losers	115
	i)	Rest periods between heats and next round	115

2. Procedure when reporting for duty
3. Practical knowledge of the duties of;

a) the Starter
b) the Marksmen (Starters Assistants)

4. Equipment required for starting/marking and its use
5. Basic principles involved in positioning of the Starter and Marksmen (Starters Assistants) for the start.
6. Starting techniques–holding time, standing up, recalling

Books of Reference: UKA Rule Book
UKA Instructional Book: Starting and Marksmanship

Syllabus to Advanced Written Test–Track
Additional to syllabus for preliminary paper:

		UKA Rules and relevant	*IAAF Rules*
1.	Duties of a Track Referee	112 & Appendix D	
2.	Checking track measurements	108 See also track measurement diagrams	
3.	Relationship of Track Referee with a) Chief Starter b) Chief Timekeeper		
4.	False and unfair starts and penalties	111	
5.	Heats and power of Referee to limit the number competing	109(3), 112,115	
6.	Procedure for Protests and Powers of Referees	23,106	
7.	Hurdles–Specifications for International Hurdle, Testing for Toppling Force, Duties of Umpires	116	
8.	Steeplechase–Specifications for water jump and hurdles etc.	117	
9.	Relays	118	
10.	Age Groups and limitations	107	
11.	Rules for Records	141	
12.	Wind Gauge	112(7)-(9),141(15)(16)	
13.	Photo-Finish	119	
14.	Combined Events	140	
15.	Allocation of duties and instructions to inexperienced officials		
16.	The qualities necessary for a good Track Judge		

Syllabus for Advanced Written Paper–Field
Additional to syllabus for preliminary paper:

		UKA Rules and relevant	*IAAF Rules*
1.	The qualities necessary for a good Field Judge		
2.	Specifications for apparatus and Implementation	123, 125, 127, 129, 132, 134, 136, 137, 139	
3.	Combined Events	140	
4.	Records	141	
5.	Duties of the Field RefereeSee UKA Instructional Book: How to Judge Field Events i) Field Judges ii) Clerk of the Course (Field) iii) Wind Gauge Operator		
6.	Allocation of duties and instructions to inexperienced officials		
7.	Rules for competition confined to particular classes		
8.	E.D.M See Appendix C		

Syllabus for Advanced Written Test–Timekeeping
This test will include the syllabus for the preliminary test, together with details of a Chief Timekeeper's duties, allocating duties to a team of Timekeepers, and requiring more knowledge of the practice of timekeeping as is likely to come with greater experience.
Knowledge of relevant IAAF Rules

Syllabus for Advance Written Test–Starter/ Marksmen
This is currently being worked on by a group of officials and will be circulated in due course in time for the 2007 exam season–to also include knowledge of relevant IAAF Rules.

HANDBOOKS AND INSTRUCTIONAL BOOKS

UKA AND IAAF Publications

For officials including: Handbooks and Rule Books; How to Judge Field Events; How to Judge Track Events; Starting and Marksmanship; Timekeeping.
Obtainable from; Athletics Bookcentre, 5 Church Road, Great Bookham, Surrey, KT23 3PN. Tel: 01372 452 804

STARTERS FIREARMS CERTIFICATION

UKA provides financial assistance to Chief, Grade I and II Starters for their certification costs. The scheme operates as follows:

Claims can be made for the renewal costs of a Firearms Certificate. A copy of the receipt issued by the relevant Police Authority must be submitted with each claim.

Claims must be submitted in the first instance to the relevant Territorial/ National Association Officials Secretary. The copy certificates and receipts will not be returned.

NEW GRADING REQUIREMENTS FOR TRACK AND FIELD TECHNICAL OFFICIALS

Officials qualifications are currently being revised and modernised. UK Athletics and officials networks are working together to build upon current practices to ensure quality, standardised experiences for new volunteers entering the sport and a clear competence based pathway for those already involved.

In association with the Home Countries, Territories and Counties a National Database of Officials has been established. Subsequently registered officials have received a pass and licence that recognises their level of qualification under the new system.

In addition to the establishment of the database, significant work has also taken place on the design and development of the new officials qualification outlined below.

1. Level 1 Assistant Officials Award

The UK Athletics Level 1 is a new award that qualifies people to assist in officiating. It enables people to develop the following qualities, skills and knowledge at a basic level:

Qualities: to be

athlete centred, fair, unobtrusive, sensitive, diplomatic, systematic, firm, focused, objective, decisive, consistent, calm

Skills: able to

measure distances and times; make and share judgements; record observations, judgements and data; ensure safety and report concerns; liaise and communicate with other officials and athletes; report rule infringements; follow procedures and apply rules

Knowledge: know about

rules for events; officiating procedures; types of events

To achieve Level 1 beginners must:

1.1 attend a Level 1 workshop delivered by an approved tutor
1.2 complete and record a minimum of two practical officiating experiences
1.3 submit evidence of practical experiences and registration form to UK Athletics

UK Athletics are responsible for maintaining a list of new Level 1 Officials and ensuring that this information is accessible to Counties, Districts, Regions, Territories and the Services.

2. Level 2

The UK Athletics Level 2 qualifies officials to operate in a single discipline–as a track judge, field judge, timekeeper, starter/ marksman–and covers all aspects of the existing Grade 4 syllabus.

Beginner officials are able to enter the system at Level 2 if they are aware of the discipline in which they wish to officiate and have prior experience within the sport.

To achieve Level 2 officials must:

2.1 attend a generic Introduction to Officiating workshop delivered by an approved tutor
2.2 attend a discipline specific workshop delivered by an approved tutor
2.3 complete a logbook
2.4 show evidence of officiating at a minimum of 4 meetings (for Field Judges this must include judging at least 1 horizontal jump, 1 vertical jump and all of the throws)
2.5 work with an appropriate mentor
2.6 submit logbook for assessment (to approved assessor) and meet assessment criteria

UK Athletics are responsible for maintaining a list of Level 2 Officials and ensuring that this information is accessible to Counties, Districts, Regions, Territories and the Services.

3. Level 3

The UK Athletics Level 3 is a progression from Level 2 that both consolidates learning at Level 2 and prepares the official to operate at a higher level through the introduction of additional modules including meeting management and appropriate technology.

To achieve Level 3 officials must:

3.1 attend a generic Meeting Management workshop delivered by an approved tutor
3.2 attend a discipline specific workshop chosen from a list of modules currently being developed, but including the following; False Start, Photo Finish, EDM, Seeding, Call Room, Clerk of Course, Duty Sheet Preparation and Reading
3.3 complete a logbook
3.4 show evidence of officiating at a minimum of 8 meetings at a level to be determined.
3.5 work with an appropriate mentor
3.6 submit logbook for assessment and undergo practical assessment of officiating competence by an approved assessor

UK Athletics are responsible for maintaining a list of Level 3 Officials and ensuring that this information is accessible to Counties, Districts, Regions, Territories and the Services.

4. Level 4

Under development at the time of publication.

5. Level 5

Under development at the time of publication. but during the period of this Rule Book the criteria will be as per existing Grade 1 via Advanced Examination and reports.

ENDURANCE EVENT OFFICIALS

TESTING AND GRADING OF ENDURANCE OFFICIALS

1 RECOGNISED GRADES

For the purpose of this scheme, Endurance Events are deemed to cover all disciplines outside of the stadium plus track events in excess of 10 miles. The respective grades of Endurance Event Officials are as follows.

1.1 Level 2–Official

This is the basic level with the aim being to recruit, encourage and recognise as many people as possible. At this level, officials are expected to have knowledge and practical experience of the duties involved for at least one year. Such experience to have been proven by satisfactory participation at a number of Endurance events and verified by an affiliated Club or Association

1.2 Level 3–Official

Officials at this level must have at least 1 year's service at Level 2 involving a number of races. They should have knowledge and practical experience of more than one area of race organisation (start, course, finish, timekeeping and rules & administration) and must have attended a Health & Safety course. They are required to have passed an Endurance Officials examination paper.

1.3 Level 5–Official

At this level an official must have at least 3 year's active service at Level 3. During that time they must have satisfied their peers of their competence. They should have knowledge and practical experience of all areas of race organisation and have acted as a "key official" in a number of races.

1.4 Sub-Disciplines

1.4.1 Starters

Starters in the Endurance disciplines must have knowledge and practical experience of starting at off-track events. They are required to have attended a Health & Safety course and must have passed the starters section of the Endurance Officials examination paper.

1.4.2 Timekeepers

Timekeepers in the Endurance disciplines must have knowledge and practical experience of Timekeeping at off-track events. They are required to have attended a Health & Safety course and must have passed the starters section of the Endurance Officials examination paper.

1.4.3 Fell & Hill Running

Officials for Fell and Hill races must comply with the requirements for one of the previous gradings and in addition show experience of having officiated at Fell and Hill events within the UK.

1.4.4 Race Walking

To qualify as a race walking judge an Official must comply with the requirements for one of the previous gradings and in addition must have passed the UK Race Walking examination.

GRADING ADMINISTRATION AND MAINTENANCE

2.1 Level 2

2.1.1 On the written recommendation of an affiliated club or an Endurance Official Level 3 or above, County Association are responsible for the appointment of Level 2 officials.

2.1.2 County Associations will forward a list of all Level 2 Endurance Officials annually to their Territory / Region / Home Country.

2.2 Level 3

2.2.1 Territorial / Regional / Home Country Associations are responsible for the appointment of all Level 3 Officials.

2.2.2 County Associations are responsible for the organisation and supervision of the examination for Level 3 Officials.

2.2.3 When so delegated by UKA, Territorial / Regional / Home Country Associations are responsible for the marking and adjudication of the examination for Level 3 Officials.

2.2.4 Territorial / Regional / Home Country Associations will maintain a list of all Level 2 and 3 Endurance Officials and forward this annually to UK Athletics.

2.3 Level 5

2.3.1 UK Athletics will be responsible for the appointment and maintenance of records for all Level 5 officials (through the Endurance Officials peer group)

2.3.2 The Endurance Officials Peer Group will be responsible for the setting and marking of the Endurance Officials examination paper. The Endurance Officials Peer Group may delegate all or some of this responsibility to the Territorial / Regional / Home Country Associations

2.3.3 UK Athletics will maintain a full list of all Endurance Event Officials

3 RACE APPOINTMENTS

UK Athletics is responsible for the nomination of all key officials at all International Endurance events. Additionally. key officials at National, Territorial and Regional Promotions or Championships should be Level 3 or above

4 IMPLEMENTATION–INTERIM ARRANGEMENTS

4.1 The initial Endurance Officials Peer Group will be appointed by the UKA Endurance PST, who will also be responsible for their Terms of Reference.

4.2 At least until 31 December 2006, the Territorial / Regional Associations cited above will be the English Territorial Associations

4.3 Until 31 December 2006 all Clubs, Leagues, Schools or other associate organisations may recommend to County Associations suitably qualified persons for appointment to Level 2 status.

4.4 Until 31 December 2006 County Associations may recommend to Area or National Associations suitably qualified persons for immediate appointment to Level 3 status.

4.5 Until 31 December 2006 National Associations (within England this is taken to be ECCU, ERRA, RWA and FRA) may recommend to the Endurance Officials Peer Group suitably qualified persons for immediate appointment to Level 5 status

4.5 Existing grade A, B, C Road Officials will automatically be graded Level 5, 3, 2 level Endurance Event Officials. (It is not intended to use Levels 1 and 4). Those appointed Level 3 or 5 must attend a Health & Safety course before 31 December 2006

Note

Until 31 December 2006, the UK Athletics Endurance Event Officials peer group may recommend suitable qualified persons for immediate appointment to any Grade. They will also be responsible for reviewing existing lists.

Additional Information

For further information on the new qualifications and pathway, you may wish to contact UK Athletics, visit the UK Athletics website (www.ukathletics.net) or speak with members of the PST Team, Peer Groups or Technical Committee.

APPENDIX F

ROAD WALKING RULES FOR CHAMPIONSHIPS

F1. All competitors under UKA Rules must be amateurs as defined by those Rules.

F2. UKA's Road Walking Championships shall include both Club and individual competitions. The Club championships shall be contested by teams from affiliated Clubs which have paid the appropriate subscription.

F3. The Championships will be:-

MEN	Senior 20kms and 50kms. Junior 10kms.
Women	Senior 10kms and 20kms. Junior 5kms.

F4. The Championships shall be contested by:-

MEN	20kms. Teams of not more than 12 to enter—8 to walk—4 to score. 50kms. Teams of not more than 9 to enter—6 to walk—3 to score. Junior 10kms. Teams of not more than 9 to enter—6 to walk—3 to score.
WOMEN	20kms. Teams of not more than 9 to enter—6 to walk—3 to score. Junior 10kms. Teams of not more than 9 to enter—6 to walk—3 to score.

Only first claim members according to UKA Rules shall be entitled to represent a Club in the team championships. Individual entries may be accepted from amateurs who are not in any Club teams, and individual entries may be accepted from foreign athletes resident outside the United Kingdom. Such entries must be submitted in writing through the entrant's own governing Association subject to IAAF Rules.

F5. The age limits shall be:-

MEN	20kms. Have attained the age of 17 on the day of competition. 50kms. Have attained the age of 18 on the day of competition. Junior 10kms. Have attained the age of 15 on 31st August within the Competition Year as defined in Rule 7(1), but not their 20th birthday on December 31st in the year of competition.

WOMEN	20kms.Must be 18 on 31st August within the Competition Year as defined in Rule 7(1). Junior 10kms. Have attained the age of 15 years on the day of the competition but not their 20th birthday on 31st December in the year of competition as defined in Rule 7(1).

There is no upper age limit for Senior Road Walking Championships.

F6. (A) Competitors who exceed the following times in the UKA's Road Walking Senior Championships will not be regarded as finishing:-

	DISTANCE	TIMES
MEN	20kms.	2hr. 20min.
	50kms.	6hr. 15min.
	Junior 10kms	No limit
WOMEN	10kms	1hr 12min.
	20kms	2hr. 30min.
	Junior 10kms	No limit

The referee on the day may use discretion in exceptional circumstances to modify the limits in the Mens' 20kms and the Womens' 20kms.

(B) If the Referee thinks that a competitor who has competed at least 80% of the distance in the 50kms Championship will not complete the full distance inside the time limit of 6hrs. 15min. he/she can stop the competitor at a convenient point (such as a lap end, timing point or check point). Competitors who are stopped by the Referee will be classified by distance and time and may, subject to (4) above, count in the team championship. Teams whose scoring members finish the full distance inside the time limit will be classified above those with a lesser number of members completing the full distance.

F7. The entry fee for each Championship shall be defined by the Race Walking PST. Team and individual entries must be made in writing to the person nominated by the Race Walking PST not later than the closing date upon the official entry form. In the case of team entries the full name and date of birth of each member of each team must be shown on the form.

F8. The UKA Road Walking Championships shall be won by the teams whose 3 or 4 competitors, where applicable, have the lowest aggregate of points. In the event of a tie, the precedence of place shall go to the team whose last scoring individual member finished nearest to first place. The individual championship shall be decided by the order at the finish of the race irrespective of whether the competitors are competing on behalf of their Clubs or as Individuals.

F9. The first three in the individual Championships and the scoring members of the first three teams in each Championship shall be presented with UKA awards.

F10. The Championships shall be held separately or in conjunction with National Championships or other suitable races. If held separately the dates shall be set by the PST for Race Walking Competition and promulgated as early as possible in the year prior to the year of competition.

F11. (a) The International System of Judging shall be used in the Championship, in accordance with IAAF Rule 230(4).

(b) Sponging and Feeding shall be at official stations as allowed by IAAF Rules of Competition. Where the rules allow for the exercise of discretion, this shall be done by the Referee for the meeting.

F12. In Championships, the responsibility for measuring the course, of providing officials and seeing that the precise course is covered, shall rest with the PST for Race Walking Competition.

F13. Where, in certain circumstances a particular situation arises not covered by the above, the UKA/IAAF Rules will apply.

APPENDIX G

SPECIFIC RULES RELATING TO TRADITIONAL SCOTTISH HEAVY EVENTS

Promoters of "Highland" Gatherings or Games may make it a condition of entry that competitors in the heavy events traditionally associated with such promotions must also wear the kilt, but this condition must be clearly stated on the entry form and in the programme and competitors will not be allowed any option. Athletes must not wear track suit bottoms or similar covering when the kilt is being worn and the wearing of Highland hose should be encouraged.

A Putting the Shot

The general rules relating to this event apply subject to the following exceptions.

Rules 132(1),(2) and (3) regarding construction shall not apply.

B Throwing the Wooden Shafted Hammer

(a) Rules 120 and 130(1) to (8) apply to this event.

(b) A safety net 3 metres long and 1 metre high should be erected 3 metres from each end of the stop board. The exact positioning of the net should be decided by the Referee or Chief Judge prior to the start of the competition.

(c) The Hammer must be delivered with both feet behind a stop-board of wood or some other suitable material painted white, 1.22m long, 10cm high and not less than 10cm wide. The competitor may rest his feet against the inner side of the stop board but not on it.

(d) The Head shall be solid and made of iron, brass or any metal not softer than brass. It must be spherical in shape with a minimum diameter of 110mm.

(e) The Handle shall be of wood, cane, plastic or any other man-made material and shall measure 1.27m overall.

(f) The weight shall not be less than 16lb (7.257kg) complete as thrown.

(g) A competitor's footwear may have an attachment of metal, fitted to the sole so as to give a better grip on the ground. The competitor shall not make any marks in the ground by any other means.

(h) Gloves may be worn. The gloves must be smooth on the back and front, and the tip of the fingers other than the thumb must be exposed.

(i) The competitor in his starting position prior to preliminary swings or turns is allowed to put the head of the hammer on the ground.

(j) It shall not be considered a foul throw if the head of the hammer touches the ground when the competitor begins the preliminary swings or turns, but if, having so touched the ground, he stops throwing so as to begin a trial again, this shall count as a failure.

(k) It shall not be a foul throw when the competitor, having started to make his throw, stops in order to improve his grip on the shaft, but three such stops in the course of an attempt shall count as a failure.
(l) If the hammer breaks during a throw or while in the air, it shall not be counted as a throw, provided it was made in accordance with the rules. If a competitor thereby loses his balance and commits a foul, it shall not count against him.
(m) A foul throw or letting go the hammer during an attempt shall count as a trial.
(n) For a valid throw the hammer head must fall completely within the inner edges of lines marking a sector of 34.92° set out on the ground.

C Throwing the 28lbs Weight for Distance

(a) Rules 120 and 130(1) to (8) apply to this event.
(b) Rule 132(1) Measurements shall apply to this event. The diameter of the circle should be 2.74 metres with a stop-board measuring 2.14m in length.
(c) The throwing implement may be of any size or shape with the diameter of the handle (ring) being not less than 11.4cm and the thickness of the ring not less than 1.6cm provided its total length is not over 45.7cm; the same implement must be used by all competitors in any event. For record purposes the implement must weigh not less than 28lbs (12.7kg) complete as thrown.
(d) A competitor may use one or both hands.
(e) For a valid throw the weight must fall completely within the inner edges of lines marking a sector of 34.92° set out on the ground.

D Throwing the 56lbs Weight for Height

(a) Rules 120 to 123 apply to this event.
(b) The weight may be of any size or shape with the diameter of the handle being not less than 1.6cm. The same implement must be used by all the competitors in any one event and for record purposes the implement must weigh not less than 56lbs (25.4kg) complete as thrown.
(c) The competitor may assume any posture and use one or both hands, but the weight must be released by the competitor from a position not more than two metres from the vertical plane of the uprights.
(d) In the event of a tie Rule 121(7) shall apply.

E Tossing the Caber Scottish Style

(a) For the purpose of this rule the words "base line" shall mean an imaginary straight line drawn from the point of delivery through the point where the thick end of the Caber first strikes the ground and extended beyond. The "extended base line" shall be the part of the foregoing line beyond the latter point. The words "vertical line" shall mean an imaginary line drawn directly vertical from the point where the thick end of the Caber first strikes the ground.

(b) The Caber (i.e. a tree trunk) may vary in length from 4 metres to 5 metres and taper from a diameter of 25cm to 35cm at the thick end to 10cm to 15cm at the rounded thin end.
(c) The Caber may be tossed from either shoulder and each competitor shall be allowed three attempted tosses. The ground should as far as possible, be level and a mark made to indicate the approximate point of delivery and direction of the toss. It is recommended that the point of delivery be inside tram lines drawn 10 metres apart. The position of the tram lines should be agreed between the competitors and the Referee prior to the start of the competition.
(d) A perfect toss shall be one where the thin end of the Caber passes through the vertical line and falls on the extended base line. To be a valid toss the thin end of the Caber must pass through the vertical line and fall within an angle of less than 90 degrees of the extended base line, otherwise the toss will count as a trial without result.
(e) If the Caber is not tossed by any of the competitors while having their first trial, a piece from the thick end of the Caber of a length determined by the judges may be sawn off and the competition shall start anew each time until a toss is recorded.
(f) The winner will be the competitor who achieves the perfect toss. The next best tosses take rank according to the nearness of the thin end of the Caber to the extended base line.
(g) The competitor must stand still at the point of his attempted toss until released by the judge.
(h) A minimum of two judges shall be appointed, one of whom will be designated Chief Judge. One stands behind the tosser to determine the nearness of the thin end of the Caber to the vertical line and one stands at right angles to the base line to check that the thin end of the Caber passes through the vertical line when at its maximum height.
(i) In the event of there being only one Caber available, the officials and competitors can agree to the angle of each attempt being recorded in order to determine the placings.

F Tossing for Distance American Style

From a wooden board 4 inches in height and 4 feet in length a Caber of from 10 to 12 feet shall be tossed. A run of from 10 to 12 metres shall be allowed and crossing of the stance or delivery point immediately after the "toss" constitutes a foul or "no toss". The light end of the Caber, i.e. the end in the tosser's hand must fall past a line parallel with the stance, and from it — the farthest away part of the Caber — the measurement is taken to the exact point of delivery at the stance. Each competitor is allowed three attempts.

DETAILS OF HEAVY EVENTS IMPLEMENTS

Age Group	**Under 17 Men**
Shot	As per age group
Hammer	12lbs, 4ft. shaft
Weight for Distance	16lbs, 18in. chain
Weight for Height	32lbs
Caber	12ft. long, 3"–4" at thin end 5"–6" at thick end

Age Group	**Junior Men**
Shot	As per age group
Hammer	14lbs, 4ft. shaft
Weight for Distance	22lbs, 18in. chain
Weight for Height	44lbs
Caber	12ft. long, 3"–4" thin end 5"–6" thick end

Age Group	**Open**
Shot	16lbs
Hammer	16lbs, 4ft. 2in. shaft
Weight for Distance	28lbs, 18in. chain
Weight for Height	56lbs
Caber	13ft–17ft long, 4"–6" thin end 10"–14" thick end

G Scottish Heavyweight (Five Event) Championship

(Gilbert Memorial Trophy)

(Shot, Scots Hammer, 28lb. Weight for Distance, 56lb. Weight for Height and Caber)

(a) This championship is subject to special conditions and every entrant must compete in each of the events or be automatically disqualified.

(b) Points in each event shall be awarded 1st 5pts, 2nd 3pts, 3rd 2pts, 4th 1pt and the competitor with the highest number of points shall be the winner. In the event of two or more athletes tying for the overall championship, the championship shall be shared. Normal championship awards for that season shall be given for the overall result.

(c) Competitors will be allowed four trials in each event except the 56lb. weight for height where the usual competition rules apply.

(d) Promoters of the meeting to which this championship may be allocated are permitted to combine a handicap competition with any of the events in the championship but entry to the championship does not include entry to the handicap or vice versa. The number of trials allowed in the handicap shall be as in the championship.

H Guidelines (as approved by IAAF) for Participation by Amateur Athletes in SGA Events and by SGA Athletes in Amateur Events

(1) Amateur athletes may only compete at SGA meetings which have been granted an SAL permit. SGA Games promoters wishing to permit amateurs to participate in their events must make application, via the Scottish Games Association (SGA), for an SAL permit so to do.

(2) Before he/she may compete in an SGA event, each amateur competitor must register in advance with the SGA by paying the appropriate registration fee for an athlete. This is in addition to payment of such entry fee as may be applied by the promoter(s) of the event. SGA registration will ensure that the amateur status of the participating athlete will continue to be recognised by the governing bodies of amateur athletics.

(3) Any monetary prizes won by an amateur entrant may be paid direct to the athlete.

(4) In recognition of and reciprocation for the SGA's operation of the arrangements detailed above, entries by SGA athletes may now be accepted at amateur meetings run under SAL auspices.

(5) SGA members meetings will continue to be run under SGA rules.

(6) Amateur meetings will continue to be run under SAL rules.

(7) An SGA athlete will, however, under current international guidelines, remain ineligible for selection as a member of a Scottish amateur national team unless and until reinstatement is granted.

(8) Each athlete must register and compete under his/her own name for both SGA and amateur events.

(9) Where SGA athletes are entering amateur events they must declare their SGA registration number – e.g. John Smith (SGA) 1234 (Perth).

(10) Members of amateur athletic clubs particpating in SGA meetings must include the name of their club in their entry – e.g. John Smith (Pitreavie AAC).

(11) When participating in SGA events amateur entrants must wear club vests.

(12) When participating in SAL events SGA athletes should wear plain vests. (NB – Advertising messages on vests etc are restricted by IAAF rules).

(13) Prizes including title awards won by SGA athletes at amateur events will normally be made available to them on the day.

(14) Rules currently imposed by the SGA and by the SAL in respect of the gender and/or age of competitors will continue in force at the SAL meetings of these respective bodies. Any suspension from competition by either SGA or SAL will be recognised by the other body.

(15) Independent Doping Control procedures shall be the same at events organised by the SGA and SAL.

(16) A Standing Committee of three representatives from each Governing Body will be appointed to monitor and develop the objectives of these guidelines and to foster clear co-operation among all athletes.

(17) Officials from either organisation are permitted to officiate at meetings run under these guidelines.

(18) SGA athletes when competing under SAL rules are restricted to individual events only.

SGA Registration fees:

17 years and over £7.50 per annum which includes personal accident insurance. Youths (10 to 16 years old) £2.00 per annum, excluding insurance.

Any athlete wishing to compete for one day only will require to pay a £2.00 registration fee; otherwise the annual fee must be paid.

APPENDIX H

CLASSIFICATION IDENTIFICATION SYSTEM FOR DISABILITY ATHLETICS

(Simplified)

TRACK EVENTS (Men and Women)

Events for the visually impaired.
T11 - Class B1
T12 - Class B2
T13 - Class B3

Events for athletes with learning difficulties.
T20 - Only Class.

Events for athletes with cerebral palsy.
T32 - Class C2u Wheelchair.
T33 - Class C3 ” ”
T34 - Class C4 ” ”
T35 - Class C5 - Ambulatory
T36 - Class C6 ” ”
T37 - Class C7 ” ”
T38 - Class C8 ” ”

Events for ambulatory athletes.
T42 - Class A2 (A9)
T43 - Class A3 (A9)
T44 - Class A4 (A9), LAT3.
T45 - Class A5/7
T46 - Class A6, A8, LAT4.

Events for athletes in wheelchairs.
T51 - Class T1
T52 - Class T2
T53 - Class T3
T54 - Class T4

JUMPING EVENTS (Men and Women)

Events for the visually impaired.
F11 - High, Long & Triple Jump
F12 - ” ” ” ”
F13 - ” ” ” ”

Events for athletes with learning difficulties.
F20 - High, Long & Triple Jump

Events for athletes with cerebral palsy.

F35 - Long Jump
F36 - ” ”
F37 - ” ”
F38 - ” ”

Events for ambulatory athletes.

F42 - High Jump & Long Jump
F44 - ” ” ” ”
F45 - High, Long & Triple Jump
F46 - ” ” ” ”

THROWING EVENTS (MEN)

Events for the visually impaired.

IMPLEMENT WEIGHTS

		SHOT	DISCUS	JAVELIN
F11	- Class B1	7.26kg	2.00kg	800gm
F12	- Class B2	7.26kg	2.00kg	800gm
F13	- Class B3	7.26kg	2.00kg	800gm

Events for athletes with learning difficulties.

		SHOT	DISCUS	JAVELIN
F20	- Only Class.	7.26kg	2.00kg	800gm

Events for athletes with cerebral palsy.

		SHOT	DISCUS	JAVELIN	CLUB
F32	- Class C2u- Wheelchair.		2.00kg	1.00kg	397gm
F33	- Class C3 ” ”	3.00kg	1.00kg	600gm	
F34	- Class C4 ” ”	4.00kg	1.00kg	600gm	
F35	- Class C5 - Ambulatory	4.00kg	1.00kg	600gm	
F36	- Class C6 ” ”	4.00kg	1.00kg	600gm	
F37	- Class C7 ” ”	5.00kg	1.00kg	600gm	
F38	- Class C8 ” ”	5.00kg	1.50kg	800gm	

Events for ambulatory athletes.

		SHOT	DISCUS	JAVELIN
F40	- Dwarf athletes.	4.00kg	1.00kg	600gm
F42	- Class A2 (A9), LAF5, F8	6.00kg	1.50kg	800gm
F43	- Class A3 (A9), LAF5, F8	6.00kg	1.50kg	800gm
F44	- Class A4 (A9), LAF5, F8	6.00kg	1.50kg	800gm
F46	- Class A6, A8, LAF6.	7.26kg	2.00kg	800gm

Events for athletes in wheelchairs.

		SHOT	DISCUS	JAVELIN	CLUB
F51	- Class F1, LAF1, CP2	-	1.00kg		397gm
F52	- Class F2, LAF1, CP2, CP3	3.00kg	1.00kg	600gm	
F53	- Class F3, LAF2, CP3	4.00kg	1.00kg	600gm	
F54	- Class F4, LAF3, CP3, CP4	4.00kg	1.00kg	600gm	
F55	- Class F5, LAF3, CP4.	4.00kg	1.00kg	600gm	
F56	- Class F6, (A1)(A9), LAF3, CP4, CP5.	5.00kg	1.50kg	600gm	
F57	- Class F7, (A1), (A9), LAF3.	5.00kg	1.50kg	700gm	
F58	- Class A2, A3, (A9), LAF3, F8, (LAF4).	6.00kg	1.50kg	700gm	

THROWING EVENTS (WOMEN)

Events for the visually impaired.

		IMPLEMENT WEIGHTS		
		SHOT	DISCUS	JAVELIN
F10	- Class B1	4.00kg	1.00kg	600gm
F11	- Class B2	4.00kg	1.00kg	600gm
F12	- Class B3	4.00kg	1.00kg	600gm

Events for athletes with learning difficulties.

		SHOT	DISCUS	JAVELIN
F20	- Only Class.	4.00kg	1.00kg	600gm

Events for athletes with cerebral palsy.

		SHOT	DISCUS	JAVELIN	CLUB
F32	- Class C2u- Wheelchair.	2.00kg	1.00kg		397gm
F33	- Class C3 ” ”	3.00kg	1.00kg	600gm	
F34	- Class C4 ” ”	3.00kg	1.00kg	600gm	
F35	- Class C5 - Ambulatory	3.00kg	1.00kg	600gm	
F36	- Class C6 ” ”	3.00kg	1.00kg	600gm	
F37	- Class C7 ” ”	3.00kg	1.00kg	600gm	
F38	- Class C8 ” ”	3.00kg	1.00kg	600gm	

Events for ambulatory athletes.

		SHOT	DISCUS	JAVELIN
F40	- Dwarf athletes.	3.00kg	0.75kg	400gm
F42	- Class A2 (A9), LAF5, F8.	4.00kg	1.00kg	600gm
F43	- Class A3 (A9), LAF5, F8.	4.00kg	1.00kg	600gm
F44	- Class A4 (A9), LAF5, F8.	4.00kg	1.00kg	600gm
F46	- Class A6, A8, LAF6.	4.00kg	1.00kg	600gm

Events for athletes in wheelchairs.

		SHOT	DISCUS	JAVELIN	CLUB
F51	- Class F1, LAF1, CP2.		1.00kg		397gm
F52	- Class F2, LAF1, CP2, CP3.	2.00kg	1.00kg	600gm	
F53	- Class F3, LAF2, CP3.	3.00kg	1.00kg	600gm	
F54	- Class F4, LAF3, CP3, CP4.	3.00kg	1.00kg	600gm	
F55	- Class F5, LAF3, CP4.	3.00kg	1.00kg	600gm	
F56	- Class F6, (A1), (A9), LAF3, CP4, CP5	3.00kg	1.00kg	600gm	
F57	- Class F7, (A1), (A9), LAF3.	3.00kg	1.00kg	600gm	
F58	- Class A2, A3, (A9), LAF3, F8, (LAF4)	4.00kg	1.00kg	600gm	

INDEX TO RULES FOR COMPETITION

	Rules
Accidents - Precautions	131.2; 133.2; 135.2. 138.2
Adhesive Tape	124.9
Advertising and Printed Matter	15
Age Groups	7; 107; 207; 307; 410; 507; 610
Under 13	107.2; 207.2; 207.3; 308; 410; 507; 508; 610
Under 15	107.3; 207.2; 207.3; 308; 410; 507; 508; 610
Under 17	107.4; 207.2: 207.3: 308; 410; 507; 508; 610
Junior	107.5; 207.2; 207.3; 308; 508; 610
Senior	107.6; 207.2; 207.3; 308; 508
Master	107.7; 207.3; 507
Amalgamation of Clubs	3.10
Appeals and Protests	6.8; 23
Assistance	
General	21; 105; 158.2; 214; 614; D105
Communication	21.1(b); 21.2(a); 105.3
Medical	21.2(c)
Shoes	102
Field Events	
Belt for support	130.8
Elbow protection	138.5
Forearm protection	124.10
Gloves	131.5; 133.6; 135.6; 138.5
Tape at the wrist	130.6 (Note)
Taping of fingers and hand	124.10; 130.6
Use of substances	124.10; 130.7; 131.6; 133.7; 135.7
Road Races	214.1; 214.2; D214
Track Events	
Intermediate times	112.6
Pacing	21.1(a)
Relay races	118.12
Trail Running	614.1
Athletes Representatives	11
Batons	
Dimensions	118.16

Rules
Dropping the baton 118.9
Position in relation to take-over zone 118.10
Bell 112.4
Betting 19
Blocks - see Starting Blocks
Broadcast - permission to 13

Cages- Discus and/or Hammer 137
Caution
Assistance 105.3
Throwing Events 131.3; 133.3; 135.3; 138.3
Certification and Accuracy
Road Race Courses 205.4
Tracks.. 108
Challenge Cups 20
Change of Competition Area 120.6
Check Marks
Field Events using runways.. .. .. 122.3; 124.2; 126.6
Relay 118.8
Clerk of the Course - Duties .. .. Appendix D(2)
Clothing
General Regulations 17; 222; 305; D17
Clubs - Misconduct by 14.9; 22.1
Colleges - First Claim Membership 5.3
- County Qualification 9.4; 9.6; 9.10
- Territorial Qualification .. .. 10.1(b)
Combined Events 140; D140
Conditions for records .. .. 141.19; 141.22 - 24
Failure to attempt to start 140.14
False start 140.11
Height progression 140.13
Indoors 140.6
Number of trials 140.8
Referee 140.7
Rest interval between events .. .. 140.2 (Note)
Scoring 140.15
Ties in final classification 140.16
Timing 140.10
Decathlon
Event order
Men 140.5
Women 140.5
Heptathlon
Event order indoors 140.6
Event order outdoor 140.3
Hexathlon
Events 140.2
Octathlon
Events 140.4

Rules

Pentathlon
Event order indoors 140.6
Event order outdoors 140.1
Competing Order - Field Events
Competing order 120.1
Qualifying round 120.9
Competition Year 7.1; 107.1
Composite Teams 3.15
County Qualifications 9
Cross Bars 123.3; 125.3
Cross Country
Distances.. 508
Registration of Leagues 513
Rules .. .. 500 - 514
Start 506
Transponder Timing 514

Decathlon 140.5
Delay between attempts - Field Events 120.5
Disability Athletics
Classification System .. .. Appendix H
Rules .. .. D16 D17; D24; D103; D105; D109; D111 - 113; D115; D118 - 122; D126; D127; D130 - 132; D135; D139 - 141; D206; D211; D214
Discus - see Throwing the Discus
Disqualification from Competition
Assistance 21; 105; 118.12; 214
Combined Events 140.11
Misconduct 22.2
Race Walking 306
Road Running 211.3
Track Events
False start.. .. .. 111.14; 111.15
Hurdles 116.12
Lane infringement 112.1
Obstruction 112.2
Relay .. .. 118.9 - 13
Steeplechase 117.8
Draw
Combined Events 140.9
Field Events.. .. .. 120.1; 120.2; 120.9
Track Events 109.1; 109.2
Dressing Accommodation 104
Drink and Refreshment Stations
Road races 206

Rules
Electronic Distance Measurement .. .. Appendix C
Endurance Technical Officials Grading .. .. Appendix E
Entries 14; 208; 216; 223; 226; 406; 504; 615
Eligibility to compete.. .. .. 1; 4
Entry Fees 14.4; 14.10
Entry Forms 14

Failure
Jumps
High Jump 122.5
Long Jump 126.7;
Pole Vault.. .. .. 124.6; 124.7
Triple Jump 126.7
Throws
Discus 135.9; 135.10; 135.12; 135.13
Hammer 133.9; 133.10; 133.15; 133.16
Javelin .. .. 138.8 - 14; 138.16; 138.18
Shot.. .. .. 131.8; 131.9; 131.11; 131.13; 131.14
to participate 115.3; 120.10; 140.14
False Start - see Start
Fell and Hill Running .. .. 400 - 412
Field Judge - Duties.. .. .. Appendix D
Finish Line.. .. .. 113.1; 113.2
Finish of race 113.3; D113
First Claim
Armed Services.. .. .. 5.4
Exemption from requirements 6
Foreign Athletes 5.6
General Qualifications 5
Fixed Time Races 141.20; 156
Footwear 102

Gloves 131.5; 133.6; 135.6;
.. .. 138.5
Graded Competition 107.8
Grading of Technical Officials .. .. Appendix E

Hammer - see Throwing the Hammer
Hand Timing 119.1-9
Heats - see also Draw 115.1; 115.2
Qualification from heats 115.1; D115
Time interval between rounds 115.2
Heavy Events (Scottish) .. .. Appendix G
Heptathlon 140.3; 140.6

Rules

High Jump 122; 123; D122
- Crossbar specifications 123.3
- Crossbar support 123.4
- End pieces .. .. 123.3(d); 123.4
- Failure 122.5
- Height progression .. .. 121.4; 121.6(b)
  - Combined Events .. .. 121.4 Note
- Indoors .. .. Appendix A (A3)
- Landing area 123.7
- Measurement of height 121.5
- Number of attempts 121.2
- Runway
  - Inclination.. .. .. 123.5
  - Length 123.6
- Ties 121.7
- Uprights 122.2; 123.1; 123.2; 123.4

Higher Competition Clubs and membership 3.3

Horizontal Jumps 126; 127; 128; 129; D126; D127

Hurdles
- Construction 116.2-6
- Counterweights.. .. .. 116.7-9
- Dimensions 116.4
- Disqualification.. .. .. 116.10; 116.12
- Distances & Specifications
  - Indoors.. .. .. 116.14
  - Outdoors 116.13
- Lane running 116.1
- Positioning on track 116.7
- Records 116.11; 141

Javelin - see Throwing the Javelin

Judges - duties .. .. Appendix D

Junior Men and Women - Regulations .. .. 107.5; 207(iv); 507(iv)

Kerb
- Measuring track length 108.5; 108.6
- Replaced by cones.. .. .. 108.3

Lanes
- Lane running 112.1
- Width - Outdoor 108.5

Lap Indicator
- Ringing of bell 112.4

Lap Scorer - Duties .. .. 112.4; 155.2; Appendix D

Leagues - Registration
- Cross Country 513
- Track and Field 101

Rules
Leaving the track or course 112.3; 158.3;
Location change in field events 120.6
Long Jump
Centralised landing area 127.9
Failures 126.7
Indoors .. .. Appendix A (A3)
Landing area 127.9; 128.2; 128.3
Measurement of jump .. .. 126.8 - 10
Plasticine indicator board 127.7
Runway .. .. 126.5; 127.2 - 4
Take-off board 127.1; 128.3; 129.3
Take-off line .. .. 126.4 - 8
Wind measurement 126.11

Manager - Technical - Duties .. .. Appendix D
Markers - see also Check Marks 118.8; 122.3; 124.2; 126.6; 130.4; 138.7
Marksmen (Starters' Assistants) - Duties .. .. Appendix D
Masters - definition .. .. 107.7; 207.3; 507(vi)
Hurdle specifications 116.13
Putting the Shot specifications 132.8
Steeplechase events 117.9
Throwing the Discus specifications 136.8
Throwing the Hammer specifications 134.5
Throwing the Javelin specifications 139.4
Meeting Manager - Duties .. .. Appendix D 1(b)
Membership of Club 3; 5
Misconduct 22
Mixed Competition 107.8; 310; 510

Notification of Events to be broadcast 13
Number Cards 18; 103; 209; 227; 306; D103
Perforations 18.1
Worn as issued 18.1

Obstruction
Field Event 120.7
Relay 118.11
Track Events 112.2
Official Implements 130.5
Official Time
Track races 119.1; 119.8; 119.23; 119.25
Open Competition - Definition 4.2; 4.3
Oral Protest 106.3

Pentathlon 140.1: 140.6
Permission to Promote 12
Permission to broadcast 13

Rules

Photo Finish
- Accuracy and certification .. 119.15 -17
- Chief Photo Finish Judge
  - Duties .. 119.18; 119.19; 119.21 - 24; 119.26
  - Liaison with other Officials .. 119.21; 119.23
  - Role in resolving ties .. 119.24(d)
- Numbers on shorts .. 103.2
- Official times .. 115.1; 119.23; 119.24; D119
- Reading times
  - Races up to 10000m .. 119.24(a); D119.2
  - Races over 10000m.. 119.24(b)
  - Races out of stadium .. 119.24(c)
- Requirements of the system .. 119.11 - 17; 119.20
- Zero control operation .. 119.17

Place of Competition - Change .. 120.6; 122.2;
Plasticine Indicator Board - Specifications .. 127.7
Pole Vault
- Box .. 125.6
- Crossbar
  - Specification .. 125.3
- Failure .. 124.6
- Height progression .. 121.4; 121.6; 121.7(c)
  - Combined Events .. 121.4
- Indoors .. Appendix A (A3(a))
- Landing area .. 125.8
- Measurement of height .. 121.5; 121.6
- Pole
  - Break during vault .. 124.11
  - Construction .. 124.9
  - Falling towards bar .. 124.7
  - Taping .. 124.10
- Protection against injury .. 124.10
- Runway
  - Inclination.. 125.7
- Taping fingers or hand .. 124.10
- Uprights .. 125.1; 125.2
- Use of substances .. 124.10

Programme and Printed Matter .. 15
Promote - Permission to .. 12
Protests & Appeals
- Appeal against decision .. 6.8; 23.5
- Eligibility to compete.. 23.1; 23.2
- Procedures .. 23.3; 23.4

Putting the Shot .. 131; 132; D131; D132
- Circle .. 132.1 - 5

Rules

Failure 131.8; 131.9; 131.11; 131.14
General conditions 130; 131
Indoors .. .. Appendix A (A3(c))
Landing sector 130.10; 141.7
Measurement of trial .. .. 130.10; 131.15 - 17
Implement details 132.8
Stop board 132.6
Valid put 131.14

Qualifying Competition - Field Events.. .. .. 120.8; 120.9
Qualifying Standards 120.8

Race Walking
Age Groups 307
Clothing 305
Definition of Walking 301
Disqualification.. 306
Judges.. 303
Maximum Distances 308
Mixed Competition 310
Permission to Promote 302
Safety and medical 309
Recaller - Duties .. .. 111.4; 111.15; Appendix D (2)

Records
Combined Events 141.16; 141.19; 141.22-24
Disability Athletics D141
Field Events .. .. 141.7; 141.13 -15; 141.18; 141.22 - 24
Indoor 141.5; 141.24; 141.25
Junior 141.23
Race Walking .. .. 141.11; 141.22 - 24
Relay .. .. 141.22 - 24
Track .. .. 141.5 - 10; 141.12; 141.14; 141.15; 141.20; 151; 159
UK All-Comers 141.22; 141.24
UK Junior 141.23
UK National.. .. .. 141.22 - 24

Referee
Combined Events 140.7
Field - duties .. .. 120.6 - 8; 120.10; 122.2; 124.7; 130.5; 131.3; 133.2; 133.3; 135.2; 138.2; 138.3; 141.13; Appendix A(2)
Protests - duties 23.1; 23.2

Rules
Race Walking 304.2; 305; 306
Track - duties .. .. Appendix A (A2)
Refusal of Entries 14.2
Registration of Leagues 101; 513
Relay Races 118; D118
Acceleration zone 118.2;
Assistance 118.12
Baton .. .. 118.9 - 11; 118.16
Check marks 118.8
Infringements .. .. 118.9 - 11; 118.13
Take-over zone .. .. 118.1 - 3; 118.7; 118.10
Team membership 118.14; 118.15
Resignation from Club 3.7
Rest Periods 115.2
Road Races
Course measurement 205.4
Drinks and refreshment stations 206
Transponder timing system 213
Road Relay .. .. 221 - 229
Road Running Rules .. .. 202 - 219
Road Walking Championships .. .. Appendix F

Schools
County Qualification 9.4; 9.10
First Claim Status 5.1
Territorial Qualification .. .. 10.1(b)
Scottish Heavy Events - Regulations .. .. Appendix G
Second Claim status 3.2
Senior Men and Women - Regulations .. .. 107.6; 207.3(v); 507(v)
Services
County Qualification .. .. 9.2(c)
First Claim 5.4
Shoes
Construction .. .. 102.2 - 5
Dimension of spikes 102.3; 102.5
Number of spikes 102.2
Shoe strap 102.1
Shot Put - See Putting the Shot
Spikes - see Shoes
Start
Commands 111.8
Delay in responding to commands 118.9
False start 111.13
Split start 109.5
Start line 111.1; D111
Starter and Recallers - Duties .. .. 111.3-5; 111.8; 111.15; Appendix D(2)

Rules
Starting Blocks D111.10
Construction 110.4
Positioning within lane .. .. 110.4(d)
Restriction of use .. .. 110.1 - 3
Steeplechase
Distances 117.9
Infringements 117.8
Specifications
Hurdles .. .. 117.1 - 3; 117.5
Placing on track 117.4
Water Jump 117.6; 117.7
Students - First Claim status 5.3; 9.4; 9.10
Stop Board 132.6
Suspension Book 3.12

Take-off Board 127.1; 129.4; D127.1
Take-over zones .. .. 118.1 - 3; 118.6; 118.10
Team Competition
Conditions 3.3; 4.3; 8; 10.2; 100; 203; 221; 409; 509
Number to compete 8.1; 8.2; 100.2; 100.3; 100.9
Technical Manager - Duties .. .. Appendix D(2)
Technical Officials - Grading .. .. Appendix E
Territorial and District Qualifications .. .. 10.1 - 4
Throwing Events - General Conditions 130; D130
Throwing the Discus 135; 136; D135
Cage 137
Circle 136.3; 136.5
Failure 135.3; 135.9; 135.10; 135.13
Implement details .. .. 136.6 - 8
Landing sector 130.10
Measurement of trial .. .. 130.10; 135.13 - 16
Throwing the Hammer 133; 134
Cage 137
Circle .. .. 134.1 - 4
Failure 133.3; 133.9; 133.10; 133.15; 133.16
Gloves 133.6
Implement details 134.5
Landing sector 130.10
Measurement of trial .. .. 133.17 - 19
Throwing the Javelin 138; 139; D139
Failure .. .. 138.3; 138.8 - 14; 138.16; 138.18
Implement details 139.4
Landing sector 138.20
Measurement .. .. 138.17 - 20

Rules
Runway 139.1; 139.2
Unorthodox technique .. .. 138.9 - 11
Valid throw 138.18
Ties
Combined Events 140.16
Horizontal jumps 126.3
Throwing events 130.3
Track events 114
Vertical jumps 121.7
Timekeepers - duties.. .. .. 119.3; 119.5; 119.6; 154; 155; Appendix B; D(2)
Chief Timekeeper - Duties .. .. 112.6; 119.6; 119.8; 119.9; 119.23; Appendix B; D(2)
Code of Practice .. .. Appendix B
Combined Events 140.10
Reading times 119.7
Records 141.9; 141.10
Track Judges - Duties .. .. Appendix D (2)
Track Measurement 108
Lateral inclination 108.1
Trail Running .. .. 601 - 616
Transponder Timing System 213; 514
Triple Jump
Centralised landing area 127.9
Indoors .. .. Appendix A (A3)
Landing area 127.9; 129.4
Measurement of jump .. .. 126.8 - 10
Plasticine indicator board 127.7
Runway .. .. 126.5; 126.6; 127.2 - 4
Sequence of jumps 129.2
Sleeping leg 129.2
Take-off board 127.1; 127.6; 129.4
Take-off line .. .. 126.4 - 8; 127.7; 127.8;
Wind measurement 126.11

Ultra Distance Events 151-159
Umpires - Duties .. .. 112.1; Appendix D (2)
Under 13 Boys and Girls - Regulations 107.2; 207.2; 207.3; 308; 410; 507; 508; 610
Exemption from First Claim Rules 5.2
Under 15 Boys and Girls - Regulations 107.3; 207.2; 207.3; 308; 410; 507; 508; 610
Exemption from First Claim Rules 5.2

Rules
Under 17 Men and Women - Regulations 107.4; 207.2; 207.3; 308; 410; 507; 508; 610
Under 20 Men and Women - Regulations 107.5; 207.2; 207.3; 308; 507; 508; 610
Universities and Colleges
County Qualification 9.4; 9.10
First Claim status 5.4
Territorial Qualification .. .. 10.1(b)
Uprights
High Jump .. .. 122.2; 123.1; 123.2; 123.4; 123.7(Note)
Pole Vault 125.1; 125.2; 125.5

Veterans - see Masters except for 402
Video Recording 106.4

Walking Judges - Duties .. .. 304.1; 304.2; 306; Appendix D(2)
Warm-up at competition area 120.11; 131.4; 133.4; 135.4; 138.4
Warning and Disqualification
Assistance 21.1; 105.3
Misconduct 22.2
Race Walking 306
Start 111.14; 111.15
Watches - Definition 119.4
Water Jump
Clearance.. .. .. 117.8
Dimensions 117.7
Disqualification.. .. .. 117.8
Wheelchair Specifications D108A
Wind Gauge
Horizontal Jumps
Duration of recording .. .. 126.11(b)
Positioning .. .. 126.11(a)
Reading values .. .. 126.11(c)
Track Events
Duration of recording 112.8
Positioning 112.7; D112.7
Recording values 112.9
Wind Gauge Operator - Duties .. .. Appendix D(2)

Zero Control Operation (Photo finish).. .. .. 119.14

NOTES

NOTES